PRELIMINARY / FINAL LAND DEVELOPMENT AND SUBDIVISION PLAN

ARCONA NEIGHBORHOOD 8.2

REVISION # 2 - REVISED FINAL SUBDIVISION AND LAND DEVELOPMENT PLAN

ARCONA NEIGHBORHOOD 8.1

PLAN INDEX

NO.	SEC.	TITLE
1	CV-1*	COVER SHEET
2	CV-2*	COVER SHEET – NOTES
3	EX-1	EXISTING CONDITIONS PLAN – OVERALL
4	EX-2	EXISTING CONDITIONS PLAN
5	EX-3	EXISTING CONDITIONS PLAN
6	EX-4	EXISTING CONDITIONS PLAN
7	EX-5	EXISTING CONDITIONS PLAN
8	SD-1*	SUBDIVISION AND LOT ADD-ON PLAN
9	CP-1	COMPARISON PLAN
10	LY-1*	ARCONA TND OVERVIEW
11	LY-2*	LAYOUT PLAN
12	LY-3*	LAYOUT PLAN
13	LY-4*	LAYOUT PLAN
14	LY-5*	PARCEL LABEL PLAN
15	LY-6*	PARCEL LABEL PLAN
16	LY-7*	PARCEL LABEL PLAN
17	LY-8	GUEST PARKING AND SNOW EASEMENT PLAN
18	BE-1*	BUILDING SETBACK EXHIBIT
19	EA-1*	EASEMENT PLAN – OVERALL
20	EA-2*	EASEMENT PLAN – OVERALL
21	EA-3*	EASEMENT PLAN – STORM DRAINAGE AND COMBINED ACCESS & UTILITY EASEMENTS
22	EA-4*	EASEMENT PLAN – STORM DRAINAGE AND COMBINED ACCESS & UTILITY EASEMENTS
23	EA-5*	EASEMENT PLAN – WATER, SNOW & CONSERVATION EASEMENTS
24	EA-6*	EASEMENT PLAN – WATER, SNOW & CONSERVATION EASEMENTS
25	EA-7*	EASEMENT PLAN – SANITARY SEWER & RIPARIAN EASEMENTS
26	EA-8*	EASEMENT PLAN – SANITARY SEWER & RIPARIAN EASEMENTS
27	TM-1	TURNING MOVEMENTS PLAN
28	TM-2	TURNING MOVEMENTS PLAN
29	TM-3	TURNING MOVEMENTS PLAN
30	CD-1	CONSTRUCTION DETAILS
31	CD-2	CONSTRUCTION DETAILS
32	CD-3	CONSTRUCTION DETAILS
33	CD-4	CONSTRUCTION DETAILS
34	UT-1	UTILITY PLAN – OVERALL
35	UT-2	UTILITY PLAN
36	UT-3	UTILITY PLAN
37	UT-4	UTILITY PLAN
38	UT-5	UTILITY DETAILS
39	SM-1*	POST CONSTRUCTION STORMWATER MANAGEMENT PLAN – COVER
40	SM-2*	POST CONSTRUCTION STORMWATER MANAGEMENT PLAN
41	SM-3*	POST CONSTRUCTION STORMWATER MANAGEMENT PLAN
42	SM-4*	POST CONSTRUCTION STORMWATER MANAGEMENT PLAN
43	SM-5*	POST CONSTRUCTION STORMWATER MANAGEMENT PLAN
44	SM-6*	POST CONSTRUCTION STORMWATER MANAGEMENT DETAILS
45	SM-7*	POST CONSTRUCTION STORMWATER MANAGEMENT BASIN DETAILS
46	RD-1	ROOF DRAIN CONNECTION PLAN
47	PF-1	PLAN & PROFILE – PARADE STREET & BREECHES WAY
48	PF-2	PLAN & PROFILE – EGRETON ROAD
49	PF-3	PLAN & PROFILE – STREET I
50	PF-4	PLAN & PROFILE – UTILITIES
51	PF-5	PLAN & PROFILE – UTILITIES
52	PF-6	PLAN & PROFILE – UTILITIES
53	PF-7	PLAN & PROFILE – GAS
54	LA-1	LANDSCAPING & LIGHTING PLAN
55	LA-2	LANDSCAPING & LIGHTING PLAN
56	LA-3	LANDSCAPING & LIGHTING PLAN
57	ES-1	EROSION & SEDIMENTATION CONTROL PLAN – COVER
58	ES-2	EROSION & SEDIMENTATION CONTROL PLAN
59	ES-3	EROSION & SEDIMENTATION CONTROL PLAN
60	ES-4	EROSION & SEDIMENTATION CONTROL PLAN
61	ES-5	EROSION & SEDIMENTATION CONTROL PLAN
62	ES-6	EROSION & SEDIMENTATION CONTROL PLAN – DETAILS
63	ES-7	EROSION & SEDIMENTATION CONTROL PLAN – DETAILS
64	ES-8	EROSION & SEDIMENTATION CONTROL PLAN – BASIN DETAILS

* SHEET TO BE RECORDED

EQUITABLE OWNER / DEVELOPER (ARCONA NEIGHBORHOOD 8.2):
Charter Homes Development Company
322 North Arch Street
Lancaster, PA 17603

OWNER / DEVELOPER (ARCONA NEIGHBORHOOD 8.1):
Charter Homes at Arcona Inc.
322 North Arch Street
Lancaster, PA 17603

SOURCE OF TITLE:
Tax Map 13-10-0256-232
Inst. No.: 202035221

OWNER (ARCONA NEIGHBORHOOD 8, LOT 8A)
Ruth D. Lesher
1340 Rossmoyne Road
Mechanicsburg, PA 17055

SOURCE OF TITLE:
Tax Map 13-10-0256-226
Inst. No.: 201729508 (1/2 interest)

OWNER (ARCONA NEIGHBORHOOD 8, LOT 8A)
Strong & Detweiler Partnership
1340 Rossmoyne Road
Mechanicsburg, PA 17055

SOURCE OF TITLE:
Tax Map 13-10-0256-226
Deed Book: 274, Page 1884 (1/2 interest)

OWNER (ARCONA NEIGHBORHOOD 8, LOT 8B)
Emerson L. & Ruth D. Lesher
1340 Rossmoyne Road
Mechanicsburg, PA 17055

SOURCE OF TITLE:
Tax Map 13-10-0256-032
Deed Book: 134, Page 114

OWNER (ARCONA NEIGHBORHOOD 8, LOT 8C)
Emerson L. & Ruth D. Lesher
1340 Rossmoyne Road
Mechanicsburg, PA 17055

SOURCE OF TITLE:
Tax Map 13-10-0256-009
Inst. No.: 201905003

OWNER (ARCONA NEIGHBORHOOD 8, LOT 8D)
Ruth D. Lesher
1340 Rossmoyne Road
Mechanicsburg, PA 17055

SOURCE OF TITLE:
Tax Map 13-10-0256-227
Deed Book: 184, Page 353

SITE ACREAGE:

ARCONA NEIGHBORHOOD 8.2 – GROSS AREA 31.09 Ac.

SITE DATA:

ZONING:
R-2 Single-Family Residential
District (TND Overlay)

PROPOSED USE:

56 Single-Family Lots
88 Single-Family Attached Units
144 Total Units

PROPOSED WATER SERVICE:

PUBLIC

PROPOSED SEWER SERVICE:

PUBLIC

NOTES:

1. PA ONE CALL, REQUESTED WAIVERS AND NOTES ARE LOCATED ON CV-2.
2. LEGENDS ARE LOCATED ON EX-1 & LY-1.
3. SOILS TABLE IS LOCATED ON EX-4.
4. THE OWNER(S) WILL PROVIDE A NOTARIZED CERTIFICATE OF OWNERSHIP SIGNATURE PRIOR TO FINAL PLAN RECORDATION.
5. SEE BUILDING AND PARKING SUMMARY ON LY-1.

SEE SD-1 FOR SUBDIVISION PLAN

THIS REVISED FINAL SUBDIVISION AND LAND DEVELOPMENT PLAN FOR ARCONA NEIGBORHOOD 8.1 SUPERCEDES THE FOLLOWING AREAS OF REVISED FINAL PLAN FOR ARCONA 8.1 LAST REVISED MAY 16, 2022 AND CONDITIONALLY APPROVED BY THE BOARD OF COMMISSIONERS AT THEIR MEETING MAY 23, 2022.

- LOT I – REVISE LOT I AND PARKING FOR PHASE 8.2.

LOCATION MAP
SCALE: 1" = 2000'

COMMONWEALTH OF PENNSYLVANIA – REGISTERED PROFESSIONAL – MATTHEW A. WAYMAN – LAND SURVEYOR No. SU-[illegible]

CERTIFICATE OF ACCURACY (BOUNDARY & TOPO SURVEY)

I hereby certify that, to the best of my knowledge, the Boundary and Topographic survey shown and described hereon is true and correct to the accuracy required by the Subdivision and Land Development Ordinance of Lower Allen Township.

For Howell Kilne Surveying, LLC

COMMONWEALTH OF PENNSYLVANIA – REGISTERED PROFESSIONAL – G. MITCHELL KING – LAND SURVEYOR No. SU-[illegible]-E

CERTIFICATE OF ACCURACY (LOT SURVEY)

I hereby certify that, to the best of my knowledge, the Lot survey shown and described hereon is true and correct to the accuracy required by the Subdivision and Land Development Ordinance of Lower Allen Township.

For Towne Square Engineering

G. Mitchell King 10/13/22

COMMONWEALTH OF PENNSYLVANIA – REGISTERED PROFESSIONAL – G. MITCHELL KING – LAND SURVEYOR No. SU-[illegible]-E

CERTIFICATE OF ACCURACY (PLAN)

I hereby certify that, to the best of my knowledge, the plan shown and described hereon is true and correct to the accuracy required by the Subdivision and Land Development Ordinance of Lower Allen Township.

For Towne Square Engineering

G. Mitchell King 10/13/22

COMMONWEALTH OF PENNSYLVANIA – REGISTERED PROFESSIONAL – G. MITCHELL KING – ENGINEER No. PE[illegible]

STORMWATER MANAGEMENT DATA CERTIFICATION

I, G. Mitchell King, P.E., P.L.S., on this date 10/13/22 have reviewed and hereby certify that the drainage plan meets all design standards and criteria of the Lower Allen Township Act 167 Stormwater Management Ordinance.

For Towne Square Engineering

G. Mitchell King

CUMBERLAND COUNTY PLANNING DEPARTMENT

REVIEWED THIS 2 DAY OF May, 2022
BY THE CUMBERLAND COUNTY PLANNING DEPARTMENT.

Kirk Stoner
DIRECTOR OF PLANNING

CERTIFICATE FOR APPROVAL BY THE BOARD OF COMMISSIONERS

Approved by the Board of Commissioners, Lower Allen Township, Cumberland County, PA
Approved this 2nd day of August, 2022
Conditions of Approval Completed this 8th day of November, 2022

President

Secretary

CERTIFICATE OF OWNERSHIP, ACKNOWLEDGMENT OF PLAN AND OFFER OF DEDICATION

COMMONWEALTH OF PENNSYLVANIA,
COUNTY OF CUMBERLAND

On this, the 19th day of October, 2022 before me, the undersigned, personally appeared Emerson L. & Ruth D. Lesher, who being duly sworn according to the law, deposes and says that they are the Owner of the property shown on this plan, that they are authorized to execute said plan, that the plan is the act and deed of the individuals, that they desires the same to be recorded.

Lisa R Barker

Commonwealth Of Pennsylvania - Notary Seal
Lisa R. Barker, Notary Public
Dauphin County
My Commission Expires November 5, 2024
Commission Number 1006747

My Commission Expires 11/5, 2024

It is hereby certified that the undersigned are the owner(s) of the property shown in this plat and that all streets, easements and right-of-way or part thereof, if not previously dedicated are hereby tendered for dedication to the public use. That the stormwater management facilities and BMP's to be permanent fixtures can be altered or removed only after approval of a revised plan by Lower Allen Township.

Owner: Ruth D. Lesher, Emerson L. Lesher

CERTIFICATE OF OWNERSHIP, ACKNOWLEDGMENT OF PLAN AND OFFER OF DEDICATION

COMMONWEALTH OF PENNSYLVANIA,
COUNTY OF CUMBERLAND

On this, the 19th day of October, 2022 before me the undersigned person, personally appeared Ruth D. Lesher, being Manager of the Strong & Detweiler Partnership, a Pennsylvania company, who being duly sworn according to the law, deposes and says that the partnership is the Owner of the property shown on this plan, that they are authorized to execute said plan on behalf of the partnership, that the plan is the act and deed of the partnership, that the partnership desires the same to be recorded and on behalf of the partnership.

Lisa R Barker

Commonwealth Of Pennsylvania - Notary Seal
Lisa R. Barker, Notary Public
Dauphin County
My Commission Expires November 5, 2024
Commission Number 1006747

My Commission Expires 11/5, 2024

It is hereby certified that the undersigned are the owner(s) of the property shown in this plat and that all streets, easements and right-of-way or part thereof, if not previously dedicated are hereby tendered for dedication to the public use. That the stormwater management facilities and BMP's to be permanent fixtures can be altered or removed only after approval of a revised plan by Lower Allen Township.

Owner: Ruth D. Lesher, Manager

CERTIFICATE OF OWNERSHIP, ACKNOWLEDGMENT OF PLAN AND OFFER OF DEDICATION

COMMONWEALTH OF PENNSYLVANIA,
COUNTY OF CUMBERLAND

On this, the 19th day of October, 2022 before me, the undersigned, personally appeared Ruth D. Lesher, who being duly sworn according to the law, deposes and says that she is the Owner of the property shown on this plan, that she is authorized to execute said plan, that the plan is the act and deed of the individual, and that the individual desires the same to be recorded.

Lisa R Barker

Commonwealth Of Pennsylvania - Notary Seal
Lisa R. Barker, Notary Public
Dauphin County
My Commission Expires November 5, 2024
Commission Number 1006747

My Commission Expires 11/5, 2024

It is hereby certified that the undersigned are the owner(s) of the property shown in this plat and that all streets, easements and right-of-way or part thereof, if not previously dedicated are hereby tendered for dedication to the public use. The stormwater management facilities and BMP's to be permanent fixtures can be altered or removed only after approval of a revised plan by Lower Allen Township.

Owner: Ruth D. Lesher

CERTIFICATE OF OWNERSHIP, ACKNOWLEDGMENT OF PLAN AND OFFER OF DEDICATION

COMMONWEALTH OF PENNSYLVANIA,
COUNTY OF ~~CUMBERLAND~~ LANCASTER

On this, the 18th day of October, 2022 before me, the undersigned person, personally appeared Anthony Fennde-Dedrick, being Authorized Signatory of the Charter Homes at Arcona Inc., a Pennsylvania company, who being duly sworn according to the law, deposes and says that the company is the Owner of the property shown on this plan, that they are authorized to execute said plan on behalf of the company, that the plan is the act and deed of the company, and that the company desires the same to be recorded and on behalf of the company.

Cynthia K. Lucci

Commonwealth of Pennsylvania - Notary Seal
Cynthia K. Lucci, Notary Public
Lancaster County
My commission expires April 19, 2024
Commission number 1205386
Member, Pennsylvania Association of Notaries

My Commission Expires April 19, 2024

It is hereby certified that the undersigned are the owner(s) of the property shown in this plat and that all streets, easements and right-of-way or part thereof, if not previously dedicated are hereby tendered for dedication to the public use. The stormwater management facilities and BMP's to be permanent fixtures can be altered or removed only after approval of a revised plan by Lower Allen Township.

Owner: CHARTER HOMES AT ARCONA, INC.
Authorized Signatory

OUTSIDE AGENCY PERMITS

In conjunction with this project the following outside agency permits/reviews are anticipated and required:

1. Erosion Control Plan – Issued by the Cumberland County Conservation District (CCCD) for sedimentation control during construction.
2. General NPDES – Issued by CCCD/PADEP in conjunction with construction activities with one (1) or more acres of earth disturbance.
3. Sewage Planning – Approval by Lower Allen Township Authority regarding sanitary sewer service and Sewer Planning Exemption by PADEP.
4. Water Supply – Water service and detailed design by Pennsylvania American Water.

Approval of this plan is contingent upon the above-listed approvals. Any revisions to these plans as a result of outside agency approvals shall be reflected on the plan prior to recordation.

Sheet Number: 1 of 64
Project Number: 15-100-31
Date: APRIL 12, 2022

ARCONA NEIGHBORHOOD 8.2
Lower Allen Township - Cumberland County, PA
CHARTER Homes & Neighborhoods
COVER SHEET

Project Manager: DAVID B. KEGERIZE PE
Project Engineer: G. MITCHELL KING PE, PLS
Project Surveyor: MATTHEW A. WAYMAN PLS
Drafting: D TURNER
Checked by: –
Scale: 1" = 300'
0 150 300 600 900

TOWNE SQUARE ENGINEERING
313 W. Liberty St., Suite 241
Lancaster, PA 17603
Phone: (717) 283-4538
Civil Engineers & Land Planners

Section Number	DATE	REVISIONS
CV-1	10/4/22	REV. FOR NEW CHAN HOMESITES
	8/29/22	REV. PER TWP. AND CHAN COMMENTS
	8/11/22	REV. PER BUCKEYE EMAIL DATED AUGUST 5, 2022
	7/27/22	REV. PER BUCKEYE AND TWP. COMMENTS
	6/20/22	ADDRESSED LATWP ZONING COMMENTS
	6/9/22	REV. PER LATWP LETTER DATED MAY 16, 2022
	6/2/22	ADDED POTHOLE DATA

10/13/2022 10:51 AM L:\15-100-31\SHEETS\PRELIMINARY-FINAL\1 CV-01.DWG

PRELIMINARY / FINAL

SURVEY NOTES:

1. Boundary Survey of Tract 2, Tax Parcel 13-10-0256-009, 032, 226, & 227 is from survey by Howell Kline Surveying, LLC. Completed on April 13, 2015. Location of existing utilities taken from final subdivision land development plans for "Highpoint" Subdivision and supplemented with field locations by Howell Kline Surveying, LLC during the months of March and April, 2015.
2. Highway topography of Rossmoyne Road shown is from survey by Howell Kline Surveying, LLC. performed on December 3, & 4, 2019 and January 10, 2022.
3. Contours plotted from field run topographic survey by Howell Kline Surveying, LLC. located in the HKS dashed survey area as noted on the EX-1 thru EX-5.

   Datum: NAVD 88 (computed using Geoid12a) & NAD 83 (2011) (Epoch:2010.0000) (as determined by GPS observation)

   Site Bench: Top of sanitary manhole located along centerline of Rossmoyne Road, being approximately 60 feet northwest from center line of Norfolk-Southern Railroad crossing.

   Elevation: 429.44'

   Contour Interval: 2 foot
4. All features shown are existing unless otherwise noted.
5. Gross lot area is calculated to the title line. Net lot area will exclude existing street and railroad right-of-ways and include any internal, easements or right-of-ways.
6. Physical features and topography shown hereon was obtained from aerial survey performed by Aero-Metric, Job # 71060625, completed on September 18, 2006, (flight photos taken Spring 2006); and additional features field located by Howell Kline Surveying, LLC, during the months of March - April, 2015, May - September 2017, May - June 2019 and December 2019.

   Benchmark: 3/4" Rebar (set) in diversion berm on meadow hill side west of Rossmoyne Rd. & South of PA Turnpike.

   Elevation: 475.19

   Datum: NAVD 88

   Contour Interval: 2 Foot
7. The marker designation (set) indicates that the described marker will be set as part of this survey. The designation (fnd) indicates that the marker was found during the field survey. Open circle with no designation indicates no marker found or set as part of this survey.
8. Primary Control Point: 3/4" bolt found in concrete monument, Elev. 433.69 located on the property line near the intersection of Sheepford Road (T-646) and Lisburn Road (SR-2017).
9. The Site bearing orientation is referenced from Grid North based on the Pennsylvania State Plane Coordinate System (South Zone) which was derived from GPS measurements. The site Horizontal Adjustment is CORS 96.
10. The soils and soils data shown on this plan are taken from the NRCS Web Soil Survey, run done on August 17, 2010.
11. Monuments must be set (1) at the intersection of lines forming angles in the boundaries of the subdivision, (2) at such intermediate points as may be required by Municipal Engineer. Markers shall be set (1) at all corners except those monumented, (2) at the intersections of all street right-of-way lines, and (3) by the time the property is offered for sale.
12. The intent of this plan is to:
    a. Create the Arcona Neighborhood 8.2 Development Site which includes single-family detached lots, single-family attached units, and Open Space areas within Arcona Neighborhood 8.2.
    b. The Arcona Neighborhood 8.2 Development Site, Lot Q will be created from Lot 8A, Lot 8B & Lot 8D from land currently owned by Ruth D. Lesher, Emerson L. & Ruth D. Lesher, and Strong & Detweiler.
    c. Provide new sanitary sewer and storm sewer easements for the proposed development of Arcona Neighborhood 8.2.
14. A FEMA designated floodplain is not present on the Arcona Neighborhood 8.2 property.
13. Underground utilities have been shown according to information provided by others and must be field verified prior to construction, excavation or blasting. The actual locations of these utilities have not been field verified and the locations are approximate. Towne Square Engineering does not make any representation, warranty, assurance or guarantee that the underground utility location information provided by others and reflected on these drawings is correct and accurate. Towne Square Engineering assumes no responsibility for any damage incurred as a result of underground utilities omitted or inaccurately shown.

WETLANDS NOTES:

1. The Wetland Delineation on the Arcona Neighborhood 8 project report was performed by Vortex Environmental, Inc. dated July 29, 2019 and updated by Vortex Environmental, Inc. on November 9, 2021. Field location of wetland flags was performed by Howell Kline Surveying, LLC.
2. No earth disturbance, fill or other encroachment shall be permitted within the wetlands, Waters of the U.S. or Waters of the Commonwealth shown on these plans without prior approval of the proper Federal, State and Local Authorities.

GENERAL DESIGN NOTES:

1. Applicant submitted an Arcona Overall Master Plan to Lower Allen Township. Arcona Neighborhood 8.2 is part of Arcona.
2. Any revisions made to these plans after the date of plan preparation or latest revision date shall not be the responsibility of TOWNE SQUARE ENGINEERING.
3. The footprints and configurations of buildings, driveways, and their locations within lots, as depicted on these plans, are illustrative only and intended to demonstrate material compliance with Lower Allen Township ordinance requirements. The actual footprint, configuration and location of each building or driveway that is to be constructed shall be depicted in building permit plans that are submitted with the building permit application for each such building. All such buildings and driveways shall comply with all applicable Lower Allen Township ordinance requirements.
4. It is the responsibility of the Developer to obtain any and all permits or approvals required for the construction of the improvements shown on this plan. All construction shall be in conformance with the Lower Allen Township specifications in effect at the time of construction.
5. It is the Contractor's responsibility to be aware of applicable standards and specifications as well as the required methods of construction. All deviations from the plans must be approved prior to construction.
6. Any blasting will require obtaining a State Permit and prior notification to the Township.
7. No building construction shall occur until the building permits are issued in accordance with Lower Allen Township.
8. No permit will be issued for any additional installation or construction of impervious coverage unless Lower Allen Township has approved a Drainage Plan in accordance with the Lower Allen Township Stormwater Management Ordinance.
9. No one shall scale from these plans for construction purposes.
10. Connection to public sewer and public water is required for all new lots and units.
11. The Township is not responsible for construction or maintenance of any facility not dedicated for public use. Sanitary sewer facilities are proposed to be dedicated to Lower Allen Township Authority. Potable water facilities are proposed to be dedicated to PA American Water Company.
12. It will be the Contractor's responsibility to ensure that the grading plan is implemented correctly, and that proper drainage is provided during construction.
13. Lower Allen Township shall be notified in the event sinkholes are encountered during construction. The services of a registered geologist shall be obtained to assist in recommending construction techniques and permanent facilities necessary to avoid further sinkhole creation and with regard to the repair of any existing sinkholes.
14. Representatives of the Township may enter, at reasonable times, upon any property, within the Township, to investigate or ascertain the condition of the subject property in regard to any aspect regulated by the Lower Allen Township Subdivision / Land Development and / or Stormwater Management Ordinance.
15. Contractor shall schedule a preconstruction site meeting with the Township Engineer at least 48 hours prior to starting site construction activities.
16. Site disturbance is permitted to start only if and when sufficient time is available to stabilize disturbed areas in accordance with PADEP requirements and with the approved plan.
17. A Neighborhood Association (NA) will own and maintain all open space areas. The owner or NA will be responsible to remove snow from off-street parking areas and private streets / alleys.
18. Egreton Road, Bulfinch Lane, Herr Street, and Trow Street are private streets to be owned and maintained by the NA. Parade Street is a public street.
19. Recreation requirements are to be satisfied in accordance with the recreation proposal in the Overall Master Plan accepted by the Board of Commissioners on December 14, 2015. Under SALDO Section 192-60 E & F and Lower Allen Township fee schedule, Charter Homes is proposing to provide a recreation fee per dwelling unit in lieu of recreation land in the amount of (i) $1,000 when the cumulative density for the Arcona TND, is less than or equal to six dwelling units per acre, (ii) $1,250 when such cumulative density is greater than six but less than or equal to seven dwelling units per acre, (iii) $1,500 when such cumulative density is greater than seven units per acre. This recreation fee per dwelling unit shall be paid when individual building permits are issued for the community, and shall be reduced by the following:

    A. Construct a trail through Arcona Neighborhoods Open Space 31, Lot K, & Open Space 26.
    B. Construct a trail through Parcel 'A', Block 'A' as noted on "Lesher Subdivision" plan recorded Janury 10, 2008, Instrument No. 200801115.
    C. Construct Neighborhood Pool and associated amenities.
19. Highpoint, Arcona Phase 2.1, 2.2, 2.3, Arcona Neighborhood 8.1 and Arcona Neighborhood 8.2 propose a total of 863 (849) dwelling units on 133.8 acres, which equates to a density of 6.34 dwelling units per acre. Pursuant to Sections 220-126.A and B of the Zoning Ordinance and Section 192-68.E of the SALDO, this density is permitted because (i) cumulatively for such phases, 27.8 acres of common open space is proposed to be provided, which exceeds 150% of the amount of common open space that is required under Section 220-131 of the Zoning Ordinance, and (ii) recreation fees are to be paid based upon approved cumulative density as provided in General Design Note 18 above.
20. No vibratory rollers shall be utilized over the underground pipelines, unless a minimum of 4 feet of cover is achieved. At this point, the roller shall only be used in static mode only. Hand equipment shall be used by until that point.
21. Proposed material stockpiles and equipment staging areas should be removed from easement unless gas pipeline right-of-way departments provide approval.
22. No cranes will be permitted within the pipeline right-of-way without a Buckeye person onsite.
23. Reinforced concrete is not permitted within the gas pipeline right-of-way.
24. See Buckeye Partners, LP specifications on sheets CD-3 and CD-4.
25. When any construction activity is conducted in or around the Buckeye pipeline right-of-way, Buckeye's On-Site Inspector must be present at all times. NO WORK SHALL TAKE PLACE WITHOUT A BUCKEYE ON-SITE INSPECTOR PRESENT. For this free-of-charge service, contact Buckeye's local Field Operations Manager.
26. Backfill over Buckeye's Right-of-Way shall be clean fill; with soil moisture content within ±2% of optimum moisture content, free of organic material, placed in lifts and compacted by hand until 18-inches of cover is achieved. Compaction above the 18- inches of cover shall be performed with a walk-behind unit. Vibratory rollers are not permitted to operate in dynamic vibratory mode within Buckeye's ROW. Rollers may operate within Buckeye's ROW in static mode provided 5-feet of cover over the HPPPP is verified. Compaction shall be to the same degree of compaction of the surrounding areas.
27. Snow removal activities shall not stockpile snow and ice within Buckeye's HPPPP.
28. No utility bends, elbows, transitions or connections shall be located within 25-feet of Buckeye's HPPPP.
29. All waterline and sanitary sewer joints within 50-feet of Buckeye's HPPPP shall be installed with Nitrile gaskets and the crossing utilities shall be wrapped with a tracer wire within 25-feet of the crossing location.
30. When any construction activity is conducted in or around the UGI pipeline right-of-way, UGI's On-Site Inspector must be present at all times. NO WORK SHALL TAKE PLACE WITHOUT A UGI ON-SITE INSPECTOR PRESENT. For this free-of-charge service, contact UGI's local Field Operations Manager.
31. ADA compliant ramps shall be constructed at all locations where sidewalk and trails intersect vehicular traffic.

GENERAL UTILITY NOTES:

1. All easements shall be kept free of structures, fill and other encroachments that may adversely affect the function of the easement. The Owner shall not construct, plant, or maintain any structures, fences, trees, shrubbery, etc. within the sanitary sewer, stormwater or utility rights-of-way/easements, to ensure a free and clear access to all facilities.
2. Electric, telephone, cable television, gas and all other utilities shall be installed underground and a minimum of five feet from sewer main center line, Developer responsible for enforcement and relocates.
3. As-built plans will be required prior to dedication of public improvements including completed stormwater facilities.
4. All proposed utility companies shall review the Final Plans prior to construction.
5. Metallic tape shall be placed 6" above the top of all installed utilities.
6. Electric transformers, communication boxes, gas meters, and water meters shall be kept a minimum of five feet from sewer main center line, Developer responsible for enforcement and relocates.

UTILITY NOTES - SANITARY SEWER:

1. Public sewer service to be provided by the Lower Allen Township Authority.
2. The sewer components of the Arcona Neighborhood 8.2 Subdivision and Land Development Plan must be approved by the Lower Allen Township Authority.
3. Developer offers for dedication to the Lower Allen Township Authority all sanitary sewer collection and/or interceptor lines constructed by the Developer with appurtenances and a perpetual easement for the maintenance, repair, replacement or enlargement thereof, together with the right of ingress, egress and regress thereof as shown on this plan.
4. Sanitary sewer laterals shall not be placed in driveway areas, except where no alternative exists as determined by the Developer.
5. All sanitary sewer construction and materials shall be accordance with the latest edition of the Lower Allen Township Authority rules and regulations.
6. Manhole frame and cover shall be Lower Allen Township Authority Standard.
7. All manhole frames must be bolted to the manhole by four (4) ¾" stainless steel bolts spaced evenly around the frame, and imbedded at least 3" into the manhole. Manholes and sanitary sewer lines must be at least five (5') feet from the face of curb.
8. Sanitary sewer pipe shall be manufactured to meet ASTM specifications D-3034-SDR35.
9. Sanitary sewer pipe shall have a minimum of 5'-0" cover.
10. Maximum spacing between clean-outs is fifty (50) feet. Cleanouts shall be located 5' from building exterior.
11. Existing sewer main flow and service shall be maintained during all phases of construction. The contractor shall provide a work plan prior to starting sewer construction that shows how flow will be maintained.
12. Maintenance of sanitary sewer laterals off sanitary sewer mains within Arcona Neighborhood 8.2 will be the responsibility of the Owner(s) of Development Site lots.
13. Subgrade must be completed prior to sanitary sewer construction.
14. The site shall be graded to the proposed new sub-grade elevation prior to starting sewer line construction.
15. The Property Owner is responsible for final surface restoration in non-public paved roads after Authority sewer main external repair and backfill to sub-grade.
16. Trees shall not be planted within sewer easements.
17. Retaining walls shall not be placed within sewer easements without prior Authority approval.
18. Manholes in non-paved areas shall have watertight frame and covers.
19. All non-residential units shall have separate water meters.
20. Manholes having a depth greater than 12.5 feet shall have an inside diameter of 6 feet.
21. Inside drop connections at manholes are not permitted without Authority prior approval.
22. Abandoned sewer pipe and manholes shall be completely removed.
23. Changes in the approved plan sewer components require a revised plan submission and approval prior to construction.
24. Sewer lateral connections to the sewer main are not allowed until all sewer main testing is complete, a sewer permit has been issued, and the lateral is inspected by the Authority from sewer main to building outside frame.
25. Sanitary sewer lateral traps between the sewer main and outside building wall are not permitted.
26. Authority inspector to be present when utilities crossing the sewer main are constructed.

UTILITY NOTES - WATER SERVICE:

1. Public water service to be provided from Pennsylvania American Water Company.
2. Water laterals shall not be placed in the driveway area, except where no other alternative exists.
3. All water line construction shall be in accordance with Pennsylvania American Water design drawings.
4. Pennsylvania American Water Company shall design all water line service after the Final Plan has been approved and will coordinate with other utilities.
5. Hydrant and fire flow requirements of Section 192-61.B to be met prior to occupancy.
6. Final location of hydrants must be approved by the Lower Allen Department of Public Safety.
7. All Veolia Water (FKA SUEZ Water Company) shall be removed in all areas new grading and construction in Arcona Neighborhood 8.2. Water transmission main will be replaced by a new line designed and permitted by Veolia Water under separate agreement with developer.

UTILITY NOTES - STORM DRAINAGE:

1. Ownership and maintenance of stormwater facilities within the lots shall be the responsibility of the lot owner. Maintenance and ownership of storm sewer, swales and all other storm water related facilities located outside of the right-of-way is the responsibility of the property owner on which the facilities are located. Stormwater management facilities shall be maintained in design condition and free of fill and other obstructions.
2. All storm water facilities not within the public street right of way shall be provided with an easement as shown on the plans.
3. All storm drainage pipe shall be smooth interior unless otherwise noted.
4. All storm sewer materials and installation shall be per the Lower Allen Township specifications as amended.
5. A revision which involves a change in Stormwater Management control methods or techniques, or which involves the relocation or redesign of control measures, or which is necessary because soil or other conditions are not as stated on the approved plan, shall require a resubmission by the applicant in accordance with the plan requirements as set forth in the Stormwater Management Ordinance.
6. Nothing shall be placed, planted, set or put within the area of an easement that would adversely affect the function of the easement.
7. Lower Allen Township shall have the right to:
   a. Access the site to inspect stormwater facilities at any reasonable time.
   b. Require that the land owner take corrective measures and assign the land owner reasonable time periods for any necessary action.
   c. Authorize Maintenance to be done and lien all cost of all work against the properties or the private entity responsible for maintenance.
8. If the Township determines, at any time, that any permanent stormwater management facility has been eliminated, altered or improperly maintained, the landowner of the lot shall be advised of corrective measures required and given a reasonable period of time, within which to take such corrective action. If such corrective action is not taken by the owner, the Township may cause the work to be done and shall take the appropriate action to a file a municipal claim pursuant to the PA Municipal claims and tax liens Act.
9. The Developer shall be responsible for completing a "Record Survey" of all stormwater management facilities included with the approved stormwater management plan.
10. Lot owner is required to maintain lot grading and surface drainage patterns and characteristics in accordance with the approved plan.
11. Lot owner shall be responsible for the implementation and maintenance of soil erosion control measures.
12. Manhole covers for storm manholes shall be cast with the word "Storm" for identification purposes.
13. Construction of all work within the public street right-of-way and work related to storm drainage facilities requires inspection by the Township. Provide a minimum 48 hour notice to the Township before starting work.

GENERAL STREET NOTES:

1. All work shall be in accordance with PennDOT Publication 408, specifications and Publication 72, Roadway Construction Standards, unless otherwise noted.
2. Work Zone Traffic Control shall be in accordance with PennDOT Publication 213 and approved HOP plan for improvements.
3. A Right-of-Way Permit is required before starting any work within the public street right-of-way.
4. The Developer shall be responsible for the installation and maintenance of all traffic control signs and pavement markings. All pavement markings shall be hot thermoplastic.
5. Traffic control signs and pavements markings shall be installed in accordance with all PennDOT standards and regulations in effect at the time of street dedication.
6. Exact designation of "on-street" parking spaces will be subject to driveway, utility locations, sight distance and emergency vehicle access (See LY-8).
7. Pedestrian crossings shall be clearly delineated.
8. All handicapped accessible ramps shall be designed and constructed in accordance with the applicable standard requirements by PADOT.
9. No buildings, wall, fence, landscaping or plantings shall be erected, altered or maintained, and no hedge, tree or growth shall be planted or maintained, which, in each case, exceeds 30 inches within the clear sight distance at intersections. Any tree limbs extending into the clear sight distance must be limbed to a height greater than 8 feet.
10. Arcona Neighborhood 8.2 streets (Parade Street - extended) shall be offered to Lower Allen Township for dedication as a public street.
11. Street access for proposed residential lots shall be from internal streets and or alleys only, under no circumstance shall proposed residential lots be permitted access to Rossmoyne Road.
12. Single-Family front load driveways must be 18' (Min.) deep measured from street right-of-way. Exceptions as follows: Unit 638 - 19' Min., 639 - 24' Min., 640 - 22' Min.

SLOPE REINFORCEMENT AND RETAINING WALL NOTES:

1. Slope reinforcement and retaining walls shall be designed by a Professional Engineer experienced in geotechnical and retaining wall design. Specific calculations and design details will be provided to Township prior to construction.
2. A licensed geotechnical engineer qualified in soils and with experience in segmental retaining walls shall oversee and certify the construction of all retaining walls.
3. A licensed geotechnical engineer qualified in soils and with experience in slope reinforcement shall oversee and certify the construction of all slope reinforcement.
4. A geotechnical engineer shall have all soils tested and approved for use in the construction of the retaining wall prior to their construction.
5. Copies of all geotechnical reports, site observations and soil testing performed in relation to slope and retaining wall design and construction shall be provided to Lower Allen Township as they become available.
6. All soils shall be compacted to 95% of the maximum dry density as specified by the modified proctor method (ASTM-d1557) or as otherwise directed by the site geotechnical engineer.
7. Upon completion of each retaining wall, the geotechnical engineer shall submit to Lower Allen Township a geotechnical report documenting all parameters actually used in the field, provide comparison to the design values and document the acceptability of the as-built conditions.
8. All stabilized slopes and retaining walls shown on plan shall be maintained by the NA.

WAIVERS:

LIST OF REQUESTED WAIVERS & MODIFICATIONS

At a meeting held on August 22, 2022, the Lower Allen Township Board of Commissioners approved the following waivers and modifications of the Lower Allen Township Subdivision and Land Development Ordinance:

1. Waiver from Section 192-24.C requiring Preliminary plan submittal.
2. Waiver from Section 192-57.B(2)(b) requiring lots to have frontage and access to a private/public street.
3. Waiver from Section 192-57.C.(1), requiring 50' wide street right-of-way. (48' right-of-way)
4. Waiver from Section 192-63.A(3) requiring curbing to meet PennDOT Pub 408 standards. (Belgian Block)

811 Know what's below. Call before you dig.

Before You Dig Anywhere

In... PENNSYLVANIA

STOP! CALL 811 (or 1-800-242-1776 outside of PA) TOLL FREE

PA Act 287 (amended by Act 121 (2008)) requires notification to ONE CALL SYSTEM 3 working days for construction phase and 10 working days for design phase before you excavate.

PA ONE CALL SYSTEM, INC.

DESIGN PHASE SERIAL # 20220682987 (LOWER ALLEN TOWNSHIP)
(CALL MADE BY : Howell Kline Surveying, LLC)

Howell Kline Surveying, LLC., does not guarantee the accuracy of the locations for existing subsurface utility lines, structures, etc. shown on the plans, nor does Howell Kline Surveying, LLC. guarantee that all subsurface utility lines, structures, etc. are shown.
Contractor shall verify the location and elevations of all subsurface utility lines, structures, etc. before the start of work, by calling the Pennsylvania One Call System at 1-800-242-1776.

Utilities Listing - Lower Allen Township

Verizon Pennsylvania Inc
1026 Hay St.
Pittsburgh, PA 15221
Contact: Deborah Barum
Email: deborah.d.delia@verizon.com

Buckeye Partners
The Buckeye Building
6161 Hamilton Blvd.
Allentown, PA 18106
Contact: Dave Jones
Email: dajones@buckeye.com

Lower Allen Township Authority
120 Limekiln Rd.
New Cumberland, PA 17070
Contact: Brian Kauffman
Email: bkauffman@latwp.org

Lower Allen Township
2233 Gettysburg Rd.
Camp Hill, PA 17011
Contact: Bryce Thompson
email: bthompson@latwp.org

Sprint
484 Williamsport Pike
PO Box 113
Martinsburg, WV 25404
Contact: Wesley Carpenter
Email: wesley.a.carpenter@tmobile.com

PPL Electric Utilities Corporation
434 Susquehanna Trl.
Northumberland, PA 17857
Contact: Doug Haupt
Email: dlhaupt@pplweb.com

Comcast Cable Communications Inc
4601 Smith Street
Harrisburg, PA 17109
Contact: Michael Sweigard
Email: m_sweigard@cable.comcast.com

Upper Allen Township
100 Gettysburg Pike
Mechanicsburg, PA 17055
Contact: Kodi Hockenberry
Email: khockenberry@uatwp.org

UGI Utilities Inc
1301 Allen St.
Middletown, PA 17057-5987
Contact: Stephen Bateman
Email: sbateman@ugi.com

Windstream
1450 Center Point Rd.
Hiawatha, IA 52233
Contact: Locate Desk Personnel
Email: locate.desk@windstream.com

Centurylink
1025 Eldorado Blvd.
Broomfield, CO 80021
Contact: Century Link Operator Personnel
Email: relocations@lumen.com

First Energy Penelec
21 S Main St.
Akron OH, 44308
Contact: Cara Warren
Email: carawarren@firstenergycorp.com

SUEZ Water Pennsylvania Inc
6310 Allentown Blvd.
Harrisburg, PA 17112
Contact: Nat Sheffer
Email: nathaniel.sheffer@suez.com

Pennsylvania American Water
852 Wesley Dr.
Mechanicsburg, PA 17055
Contact: Jeff Horton
Email: jeff.horton@amwater.com

ZONING INFORMATION - ARCONA Neighborhood 8.2				
LOCATION: Off Rossmoyne Road, Lower Allen Township, Cumberland County, PA				
ZONE: R-2, Single-Family Rural Residential District, Traditional Neighborhood Development Overlay				
PROPOSED USE: 56 Lots SF-Detached & 88 Units SF-Attached - (Including accessory structures to single-family dwellings)				
#	ITEM	REQUIRED	PROPOSED	VARIANCE
1	MAXIMUM BUILDING HEIGHT	40 ft.	≤ 40 ft. / 50 ft.	NO
2	MAXIMUM DENSITY - Arcona to Date + Highpoint	4 Dwelling Units per ac. (up to 8)	+/- 6.3	NO
3	MINIMUM LOT AREA - Single-Family Detached	4,000 s.f.	≥ 4,000 s.f.	NO
4	MINIMUM LOT AREA - Single-Family Attached (Townhouse)	1,560 s.f.	≥ 1,560 s.f.	NO
5	MINIMUM LOT WIDTH - Single-Family Detached	40 ft.	≥ 40 ft.	NO
6	MINIMUM LOT WIDTH - Single-Family Attached (Townhouse)	20 ft.	≥ 20 ft.	NO
7	IMPERVIOUS COVER - Arcona to Date + Highpoint	≤ 50% Overall for the TND	+/- 42.07%	NO
8	MINIMUM SETBACK - FRONT - Single-Family Detached or Single-Family Attached (Townhouse)	5 ft.	≥ 5 ft.	NO
9	MAXIMUM SETBACK - FRONT - Single-Family Detached or Single-Family Attached (Townhouse)	25 ft.	≤ 25 ft.	NO
10	MINIMUM SETBACK - SIDE - Single-Family Detached	Total no less than 10 ft. - 5 ft. one side.	10 ft. / ≥ 5 ft.	NO
11	MINIMUM SETBACK - SIDE - Single-Family Attached (Townhouse)	0 ft. for interior units - Each end unit 8 ft. one side	0 ft. / ≥ 8 ft.	NO
12	MINIMUM SETBACK - REAR - Single-Family Detached or Single-Family Attached (Townhouse)	25 ft.	≥ 25 ft.	NO
13	MINIMUM SETBACK - REAR - Single-Family Detached or Single-Family Attached (Townhouse) (**served by rear-load alley)	**5 ft.	≥ 5 ft.	NO
14	WATER	Public	Public	NO
15	SANITARY SEWER	Public	Public	NO

Sheet Number: 2 of 64
Project Number: 15-100-31
Date: APRIL 12, 2022

ARCONA NEIGHBORHOOD 8.2

Lower Allen Township - Cumberland County, PA
CHARTER Homes & Neighborhoods

COVER SHEET - NOTES

Drafting: D TURNER
Checked by: -
Scale: AS NOTED

Project Manager: DAVID B. KEGERIZE PE
Project Engineer: G. MITCHELL KING PE, PLS
Project Surveyor: MATTHEW A. WAYMAN PLS

TOWNE SQUARE ENGINEERING
313 W. Liberty St., Suite 241
Lancaster, PA 17603
Phone: (717) 283-4538
Civil Engineers & Land Planners

DATE	REVISIONS
10/4/22	REV. FOR NEW CHAN HOMESITES
8/29/22	REV. PER TWP. AND CHAN COMMENTS
8/11/22	REV. PER BUCKEYE EMAIL DATED AUGUST 5, 2022
7/27/22	REV. PER BUCKEYE AND TWP. COMMENTS
6/20/22	ADDRESSED LATWP ZONING COMMENTS
6/9/22	REV. PER LATWP LETTER DATED MAY 16, 2022
6/2/22	ADDED POTHOLE DATA

Section Number: CV-2

10/13/2022 10:04 AM L:\15-100-31\SHEETS\PRELIMINARY-FINAL\2 CV-02.DWG

PRELIMINARY / FINAL

LOT LINE TABLE		
LINE	LENGTH	DIRECTION
L2	5.13'	N 40°07'46" E
L3	352.39'	N 49°52'14" W
L7	992.13'	N 68°36'34" E
L8	535.20'	N 62°45'48" E
L9	1570.58'	N 50°39'00" W
L10	2140.61'	N 50°39'00" W
L11	570.03'	N 50°39'00" W

SPIRAL TABLE			
SPIRAL	Rc	Ls	CHORD
SP1	2191.83'	244.49'	N 69°40'28" E 244.45'

EQUITABLE OWNER / DEVELOPER
(ARCONA NEIGHBORHOOD 8.2):
Charter Homes Development Company
322 North Arch Street
Lancaster, PA 17603

OWNER / DEVELOPER
(ARCONA NEIGHBORHOOD 8.1):
Charter Homes at Arcona Inc.
322 North Arch Street
Lancaster, PA 17603

SOURCE OF TITLE:
Tax Map 13-10-0256-232
Inst. No.: 202035221

OWNER (ARCONA NEIGHBORHOOD 8, LOT 8A)
Ruth D. Lesher
1340 Rossmoyne Road
Mechanicsburg, PA 17055

SOURCE OF TITLE:
Tax Map 13-10-0256-226
Inst. No.: 201729508 (1/2 interest)

OWNER (ARCONA NEIGHBORHOOD 8, LOT 8A)
Strong & Detweiler Partnership
1340 Rossmoyne Road
Mechanicsburg, PA 17055

SOURCE OF TITLE:
Tax Map 13-10-0256-226
Deed Book: 274, Page 1884 (1/2 interest)

OWNER: (ARCONA NEIGHBORHOOD 8, LOT 8B)
Emerson L. & Ruth D. Lesher
1340 Rossmoyne Road
Mechanicsburg, PA 17055

SOURCE OF TITLE:
Tax Map 13-10-0256-032
Deed Book: 134, Page 114

OWNER: (ARCONA NEIGHBORHOOD 8, LOT 8D)
Ruth D. Lesher
1340 Rossmoyne Road
Mechanicsburg, PA 17055

SOURCE OF TITLE:
Tax Map 13-10-0256-227
Deed Book: 184, Page 353

SITE ACREAGE:

ARCONA NEIGHBORHOOD 8.2
GROSS AREA = 31.085 Ac.

ZONING:
R-2 Single Family Residential
District (TND Overlay)

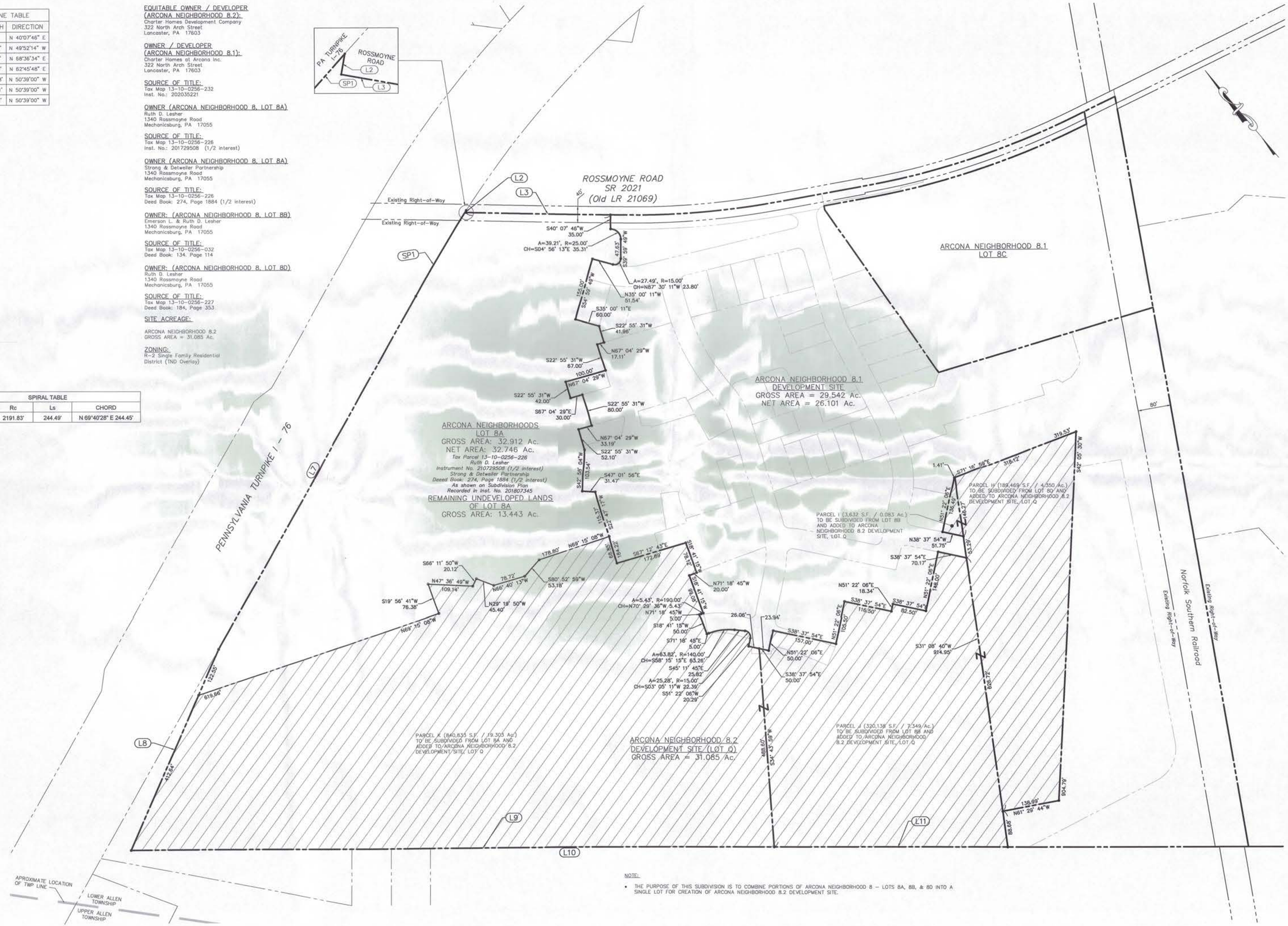

NOTE:

- THE PURPOSE OF THIS SUBDIVISION IS TO COMBINE PORTIONS OF ARCONA NEIGHBORHOOD 8 – LOTS 8A, 8B, & 8D INTO A SINGLE LOT FOR CREATION OF ARCONA NEIGHBORHOOD 8.2 DEVELOPMENT SITE.

Sheet Number: 8 of 64
Project Number: 15-100-31
Date: APRIL 12, 2022

ARCONA NEIGHBORHOOD 8.2

Lower Allen Township - Cumberland County, PA
CHARTER Homes & Neighborhoods

SUBDIVISION AND LOT ADD-ON PLAN

Drafting: D TURNER
Checked by: –
Scale: 1" = 100'
Project Manager: DAVID B. KEGERIZE PE
Project Engineer: G. MITCHELL KING PE, PLS
Project Surveyor: MATTHEW A. WAYMAN PLS

Seal: COMMONWEALTH OF PENNSYLVANIA REGISTERED PROFESSIONAL LAND SURVEYOR G. MITCHELL KING 10/13/22

TOWNE SQUARE ENGINEERING
313 W. Liberty St., Suite 241
Lancaster, PA 17603
Phone: (717) 283-4538
Civil Engineers & Land Planners

DATE	REVISIONS
10/4/22	REV. FOR NEW CHAIN HOMESITES
8/29/22	REV. PER TWP. AND CHAIN COMMENTS
8/11/22	REV. PER BUCKEYE EMAIL DATED AUGUST 5, 2022
7/27/22	REV. PER BUCKEYE AND TWP. COMMENTS
6/20/22	ADDRESSED LATWP ZONING COMMENTS
6/9/22	REV. PER LATWP LETTER DATED MAY 16, 2022
6/2/22	ADDED POTHOLE DATA

Section Number: SD-1

10/13/2022 10:07 AM L:\15-100-31\SHEETS\PRELIMINARY-FINAL\8 SD-01.DWG

PRELIMINARY / FINAL

Description	Highpoint (rev.)	Strong Road	Arcona Ph. 2.1 & 2.2 (Rev.)	Arcona Ph. 2.3 (Rev.)	Arcona Ph. 8.1 (Rev.)	Arcona Ph. 8.2	TND Totals to Date
Walking Trails	7,385 L.F. +/-	0 L.F. +/-	2,865 L.F. +/-	2,295 L.F. +/-	1,930 L.F. +/-	1,087 L.F. +/-	15,562 L.F. +/-
Site Acreage	40.1 Ac. +/-	2.6 Ac. +/-	17.0 Ac. +/-	13.3 Ac. +/-	29.7 Ac. +/-	31.1 Ac. +/-	133.8 Ac. +/-
Common OS	11.9 Ac. +/-	0.0 Ac. +/-	3.7 Ac. +/-	1.7 Ac. +/-	7.4 Ac. +/-	3.1 Ac. +/-	27.8 Ac. +/-
# Residential Units	183 (171)	0	282	107	133 (131)	144	863 (849)
Unit Density	4.27	0.00	16.61	8.03	4.41	4.63	6.34
Impervious Area	16.10 Ac. +/-	1.68 Ac. +/-	8.85 Ac. +/-	7.84 Ac. +/-	9.94 Ac. +/-	12.78 Ac. +/-	57.2 Ac. +/-
Impervious Percentage	40.17%	64.34%	52.12%	58.84%	33.43%	41.10%	42.74%

NOTES:

1. Unit density is based on current neighborhood development site acreage.
2. Additional neighborhoods will be added to the chart as they are developed.
3. Arcona Phase 8.2 proposes adding a total of 144 dwelling units on 31.09 acres, which equates to a density of 6.34 dwelling units per acre for Highpoint, Arcona Phase 2.1 & 2.2, Arcona Phase 2.3, Arcona Phase 8.1 and Arcona Phase 8.2. Pursuant to Sections 220–126.A and B of the Zoning Ordinance and Section 192–68.E of the SALDO, this density is permitted because (i) cumulatively for such phases, 27.7 acres of common open space is proposed to be provided, which exceeds 150% of the amount of common open space that is required under Section 220–131 of the Zoning Ordinance, and (ii) recreation fees are to be paid based upon approved cumulative density as provided in General Design Note 19 (See Sheet CV–2).

RECREATION FACILITIES COMPLETION SCHEDULE (TRAILS):

1. TRAILS IN OS – INSTALLED NO LATER THAN WITHIN 6 MONTHS OF ISSUANCE OF THE FIRST CERTIFICATE OF OCCUPANCY IS ISSUED FOR PHASE 8.2.
2. THE GENERAL LOCATION OF WALKING TRAILS ARE DEPICTED ON THIS PLAN. THE FINAL DESIGN AND LOCATION OF SUCH WALKING TRAILS WILL BE DETERMINED IN THE FIELD DURING CONSTRUCTION. UPON COMPLETION OF CONSTRUCTION, EASEMENTS FOR SUCH WALKING TRAILS SHALL BE ESTABLISHED ON AND OVER THE IMPROVED AREAS OF SUCH WALKING TRAILS THROUGH AN AMENDMENT TO THE DECLARATION OF CONSERVATION EASEMENT FOR ARCONA, DATED OCTOBER 6, 2014, AND RECORDED AS INSTRUMENT NO. 201422826 ("DECLARATION"). SUCH AMENDMENT SHALL INCORPORATE SUCH WALKING TRAILS AS TND TRAILS AND PUBLIC OPEN SPACE WITHIN THE MEANING OF SUCH DECLARATION AND SUBJECT TO THE TERMS OF THE DECLARATION.

OPEN SPACE TRAIL LENGTH FOR RECREATION CREDIT	
Description	Est. L.F. of Trail
8' Paved Trail - Thru Open Space 31, Open Space 26, & Lot K	1,801 L.F.
* 8' Paved Trail - Thru Parcel 'A', Block 'A', "Lesher Subdivision" plan, recorded January 10, 2008, Instrument No. 200801115	515 L.F.
Total =	2,316 L.F.

Development Site			Open Space							
Highpoint	Development Site	% Total	Rec. Lands	Common OS	Total OS Area	% Total	Village	% Total	Residential	% Total
Highpoint Phase 1.1	17.39 Ac. +/-	40%	0.00 Ac. +/-	5.69 Ac. +/-	5.69 Ac. +/-	13%	0.00 Ac. +/-	0%	11.70 Ac. +/-	27%
Highpoint Phase 1.2	5.94 Ac. +/-	14%	0.00 Ac. +/-	0.71 Ac. +/-	0.71 Ac. +/-	2%	0.00 Ac. +/-	0%	5.23 Ac. +/-	12%
Highpoint Phase 1.3	4.94 Ac. +/-	11%	0.00 Ac. +/-	1.27 Ac. +/-	1.27 Ac. +/-	3%	0.00 Ac. +/-	0%	3.67 Ac. +/-	8%
Highpoint Phase 1.4	7.00 Ac. +/-	16%	0.00 Ac. +/-	1.05 Ac. +/-	1.05 Ac. +/-	2%	5.95 Ac. +/-	14%	0.00 Ac. +/-	0%
Highpoint Phase 1.5	8.06 Ac. +/-	19%	1.85 Ac. +/-	1.35 Ac. +/-	3.20 Ac. +/-	7%	0.00 Ac. +/-	0%	4.86 Ac. +/-	11%
Highpoint (rev.) sub-total =	43.33 Ac. +/-	100%	1.85 Ac. +/-	10.07 Ac. +/-	11.92 Ac. +/-	27.5%	5.95 Ac. +/-	13.7%	25.46 Ac. +/-	58.8%
Arcona Phase 2.1 & 2.2	Development Site	% Total	Rec. Lands	Common OS	Total OS Area	% Total	Village	% Total	Residential	% Total
Arcona Phase 2.1	6.49 Ac. +/-	38%	0.00 Ac. +/-	0.00 Ac. +/-	0.00 Ac. +/-	0%	0.00 Ac. +/-	0%	6.49 Ac. +/-	38%
Arcona Phase 2.2	10.49 Ac. +/-	62%	0.00 Ac. +/-	3.68 Ac. +/-	3.68 Ac. +/-	22%	0.00 Ac. +/-	0%	6.81 Ac. +/-	40%
Arcona Phase 2.1 & 2.2 sub-total =	16.98 Ac. +/-	100%	0.00 Ac. +/-	3.68 Ac. +/-	3.68 Ac. +/-	21.7%	0.00 Ac. +/-	0.0%	13.30 Ac. +/-	78.3%
Arcona Phase 2.3	Development Site	% Total	Rec. Lands	Common OS	Total OS Area	% Total	Village	% Total	Residential	% Total
Arcona Phase 2.3.1	10.49 Ac. +/-	79%	0.00 Ac. +/-	1.74 Ac. +/-	1.74 Ac. +/-	13%	8.75 Ac. +/-	66%	0.00 Ac. +/-	0%
Arcona Phase 2.3.2	2.22 Ac. +/-	17%	0.00 Ac. +/-	0.00 Ac. +/-	0.00 Ac. +/-	0%	2.22 Ac. +/-	17%	0.00 Ac. +/-	0%
Arcona Phase 2.3.3	0.62 Ac. +/-	5%	0.00 Ac. +/-	0.00 Ac. +/-	0.00 Ac. +/-	0%	0.62 Ac. +/-	5%	0.00 Ac. +/-	0%
Arcona Phase 2.3 (Rev.) sub-total =	13.33 Ac. +/-	100%	0.00 Ac. +/-	1.74 Ac. +/-	1.74 Ac. +/-	13.1%	11.59 Ac. +/-	86.9%	0.00 Ac. +/-	0.0%
Arcona Neighborhood 8	Development Site	% Total	Rec. Lands	*Common OS	Total OS Area	% Total	Village	% Total	Residential	% Total
Arcona Phase 8.1 (Rev.)	29.54 Ac. +/-	49%	0.00 Ac. +/-	7.41 Ac. +/-	7.41 Ac. +/-	12%	0.00 Ac. +/-	0%	22.13 Ac. +/-	36%
Arcona Phase 8.2	31.09 Ac. +/-	51%	0.00 Ac. +/-	3.05 Ac. +/-	3.05 Ac. +/-	5%	0.00 Ac. +/-	0%	28.04 Ac. +/-	46%
Arcona Neighborhood 8 sub-total=	60.62 Ac. +/-	100%	0.00 Ac. +/-	10.46 Ac. +/-	10.46 Ac. +/-	17.3%	0.00 Ac. +/-	0.0%	50.16 Ac. +/-	82.7%

*Lot 633 (Community Pool) has been changed with this plan and Common OS has been changed to reflect new lot area.

ARCONA NEIGHBORHOOD 8.2 - PARKING SUMMARY (Residential)						
PHASE	LOT	UNIT TYPE	DESCRIPTION	# UNITS	REQUIRED	PROPOSED
8.2	635-690	RESIDENTIAL (SINGLE-FAMILY DETACHED)	2.0 PER UNIT	56 (Dwelling Units)	112	112 (Garages)
8.2	N/A	On-Street Parking	N/A	N/A	0	55
8.2	I*	RESIDENTIAL (SINGLE-FAMILY ATTACHED)	2.0 PER UNIT	8 (Dwelling Units)	16	16 (Garages)
8.2	I*	Guest Parking	N/A	N/A	0	0
8.2	L	RESIDENTIAL (SINGLE-FAMILY ATTACHED)	2.0 PER UNIT	9 (Dwelling Units)	18	18 (Garages)
8.2	L	Guest Parking	N/A	N/A	0	0
8.2	M	RESIDENTIAL (SINGLE-FAMILY ATTACHED)	2.0 PER UNIT	6 (Dwelling Units)	12	12 (Garages)
8.2	M	Guest Parking	N/A	N/A	0	0
8.2	N	RESIDENTIAL (SINGLE-FAMILY ATTACHED)	2.0 PER UNIT	26 (Dwelling Units)	52	52 (Garages)
8.2	N	Guest Parking	N/A	N/A	0	0
8.2	O	RESIDENTIAL (SINGLE-FAMILY ATTACHED)	2.0 PER UNIT	17 (Dwelling Units)	34	34 (Garages)
8.2	O	Guest Parking	N/A	N/A	0	8
8.2	P	RESIDENTIAL (SINGLE-FAMILY ATTACHED)	2.0 PER UNIT	9 (Dwelling Units)	18	18 (Garages)
8.2	P	Guest Parking	N/A	N/A	0	3
8.2	R	Guest Parking	N/A	N/A	0	4
8.2	S	RESIDENTIAL (SINGLE-FAMILY ATTACHED)	2.0 PER UNIT	13 (Dwelling Units)	26	26 (Garages)
8.2	S	Guest Parking	N/A	N/A	0	0
				Total	288	358

* Only Dwelling Units from 8.2 Parking from Phase 8.1 not included in this table (See LY-8).

NOTES:

1. SEE EA–1 FOR ALL PROPOSED EASEMENTS AND EXISTING EASEMENTS TO BE EXTINGUISHED.
2. PROPOSED CURB SHOWN ON THIS PLAN IS TO BE BELGIAN BLOCK.
3. UNIT #'S 645–647, 658–668 & 681–778 SHALL HAVE GARAGES LOADED FROM PRIVATE DRIVES. STREET ADDRESSES WILL BE POSTED ALONG PRIVATE DRIVES FOR UNITS WITH ONLY PRIVATE DRIVE ACCESS.
4. ALL PRIVATE DRIVES ARE TO BE CONSIDERED PUBLIC EASEMENTS FOR PUBLIC ACCESS AND ALL UTILITIES.
5. EGRETON ROAD, TROW STREET, HERR STREET, AND BULLFINCH LANE ARE PRIVATE STREETS TO BE OWNED AND MAINTAINED BY THE NEIGHBORHOOD ASSOCIATION (NA). PARADE STREET IS A PUBLIC STREET.
6. EACH DWELLING UNIT WILL HAVE INDIVIDUAL REFUSE PICKUP. ALL RESIDENTIAL UNIT OWNERS ARE REQUIRED TO PLACE REFUSE AT A COLLECTION POINT ACCESSIBLE FOR TRUCK PICKUP, AS DIRECTED BY THE NEIGHBORHOOD ASSOCIATION DOCUMENTS. HOMEOWNERS WILL BE REQUIRED TO BRING REFUSE TO END OF DRIVES.
7. EACH PARKING SPACE ADJACENT TO AN ISLAND AT THE END OF A PARKING ROW HAS AN ADDITIONAL TWO (2) FEET OF PAVING IN ADDITION TO THE REQUIRED PARKING WIDTH.
8. SEE SHEET LY–3 STREET ADDRESSES (PENDING APPROVAL).
9. SEE SHEET LY–5, LY–6, AND LY–7 FOR LOT AREAS, BEARINGS AND DISTANCES.
10. NEIGHBORHOOD ASSOCIATION TO MAINTAIN AND KEEP CLEAR ALL SNOW EASEMENTS.

LEGEND – PROPOSED

PROPERTY LINE
RIGHT–OF–WAY LINE
EASEMENT LINE
ROADWAY CENTERLINE
CURB LINE
EDGE OF PAVEMENT
EDGE OF STONE
MIN. BLDG SETBACK LINE
SANITARY SEWER LINE
SANITARY FORCE MAIN
WATER LINE — W —
GAS LINE — G —
OVERHEAD UTILITIES — OH —
OVERHEAD ELECTRIC — OHE —
UNDERGROUND ELECTRIC — UE —
OVERHEAD TELEPHONE — OHT —
UNDERGROUND TELEPHONE — UT —
FENCE — X — X — X — X —
INDEX CONTOUR 560
INTERMEDIATE CONTOUR 558
SPOT ELEVATION × 392.15
STORM INLET & PIPING
GUIDE RAIL
TREELINE
DECIDUOUS TREE
CONIFEROUS TREE
CONC. MONUMENT SET
PIN
ANGLE BREAK, PC/PT
EASEMENT CORNER
UTILITY POLE
LIGHT POLE LP
LIGHT
WELL WELL
WATER SHUT–OFF VALVE (SERVICE) WSO
WATER VALVE (MAIN) WV
FIRE HYDRANT FH
GAS SHUT–OFF VALVE (SERVICE) GSO
GAS VALVE (MAIN) GV
SEWER VENT SV
SEWER CLEAN OUT CO
ELECTRIC MANHOLE
STORM MANHOLE
SANITARY MANHOLE
TELEPHONE MANHOLE
SIGN

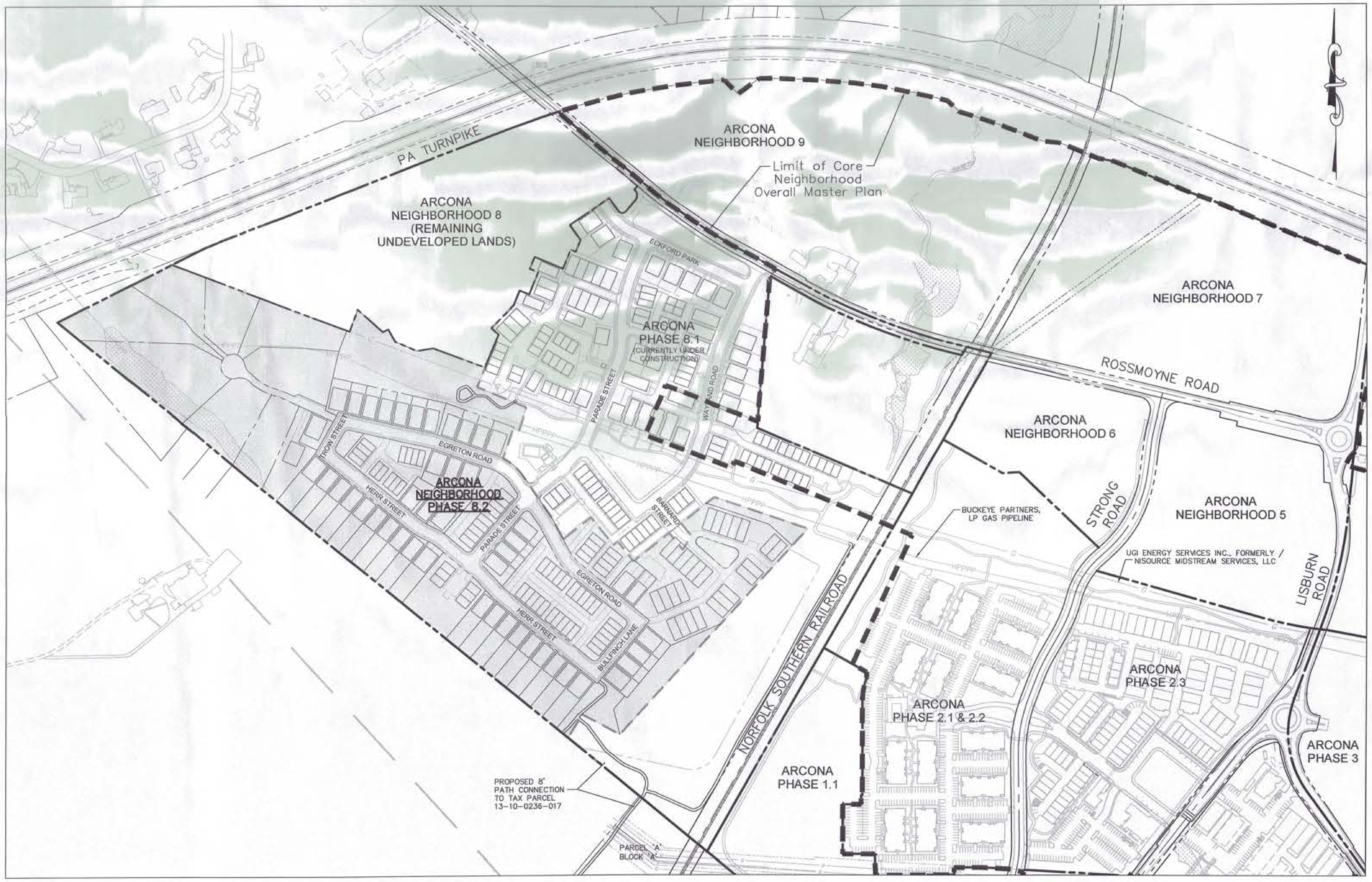

Arcona Neighborhood 8.2 - Unit Types	
Unit Type	# of Units
Single-Family Detached	56
Single-Family Attached - Town Homes	88
Total Residential Units =	144

STREET LENGTH SUMMARY	
Streets, Drives & Boulevards	L.F. of Pavement
Streets (Public)	304 L.F.
Streets (Private)	2,705 L.F.
Alleys (Private)	3,299 L.F.
Total =	6,308 L.F.

OPEN SPACE / COMMON AREAS			Meets Common Open Space Req's.
Description	Area (s.f.)	Area (Acres)	
OS-29	10,979 s.f.	0.25 Ac.	Yes
OS-30	7,280 s.f.	0.17 Ac.	Yes
OS-31	19,099 s.f.	0.44 Ac.	Yes
OS-32	4,126 s.f.	0.09 Ac.	Yes
OS-33	91,418 s.f.	2.10 Ac.	Yes
Total	132,902 s.f.	3.05 Ac.	

Sheet Number: 10 of 64
Project Number: 15–100–31
Date: APRIL 12, 2022

ARCONA NEIGHBORHOOD 8.2
Lower Allen Township - Cumberland County, PA
CHARTER Homes & Neighborhoods
ARCONA TND OVERVIEW

Project Manager: DAVID B. KEGERIZE PE
Drafting: D TURNER
Project Engineer: G. MITCHELL KING PE, PLS
Checked by: –
Project Surveyor: MATTHEW A. WAYMAN PLS
Scale: 1"=200'
0 100 200 400 600

Seal: COMMONWEALTH OF PENNSYLVANIA REGISTERED PROFESSIONAL G. MITCHELL KING LAND SURVEYOR No. SU030644E 10/13/22

TOWNE SQUARE ENGINEERING
313 W. Liberty St., Suite 241
Lancaster, PA 17603
Phone: (717) 283-4538
Civil Engineers & Land Planners

DATE	REVISIONS
10/4/22	REV. FOR NEW CH&N HOMESITES
8/29/22	REV. PER TWP. AND CH&N COMMENTS
8/11/22	REV. PER BUCKEYE EMAIL DATED AUGUST 5, 2022
7/27/22	REV. PER BUCKEYE AND TWP. COMMENTS
6/20/22	ADDRESSED LATWP ZONING COMMENTS
6/9/22	REV. PER LATWP LETTER DATED MAY 16, 2022
6/2/22	ADDED POTHOLE DATA

Section Number: LY–1

10/13/2022 10:10 AM L:\15–100–31\SHEETS\PRELIMINARY–FINAL\10 LY–01.DWG

PRELIMINARY / FINAL

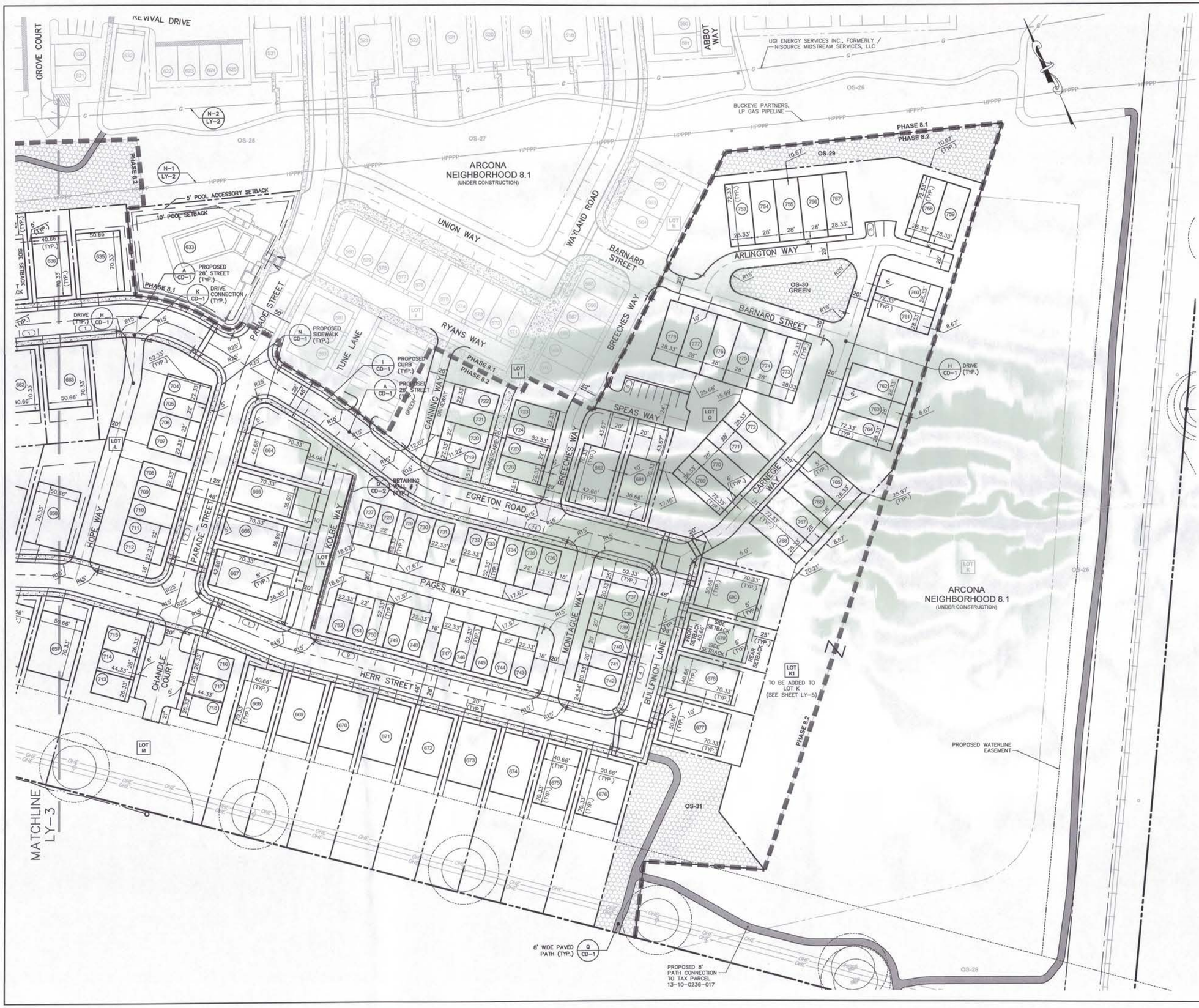

N-1 LY-2 BUCKEYE 24-INCH HIGH PRESSURE PETROLEUM PRODUCTS PIPELINE EASEMENT DESCRIBED IN MISC. BOK 127, PAGE 115 THE WIDTH OF PIPELINE EASEMENT IS NOT DEFINED IN THE INSTRUMENTS GRANTING SUCH EASEMENT. ALTHOUGH NOT SPECIFICALLY REQUIRED IN THE INSTRUMENT GRANTING SUCH EASEMENT, IT IS PRUDENT TO CONTACT THE HOLDER OF THE PIPELINE EASEMENT BEFORE PERFORMING WORK WITHIN 25 FEET OF THE PIPELINE.

N-2 LY-2 UGI ENERGY SERVICES INC., FORMERLY NISOURCE MIDSTREAM SERVICE, LLC EASEMENT DESCRIBED IN MISC. BOOK 81, PAGE 561 THE WIDTH OF PIPELINE EASEMENT IS NOT DEFINED IN THE INSTRUMENT GRANTING SUCH EASEMENT. ALTHOUGH NOT SPECIFICALLY REQUIRED IN THE INSTRUMENT GRANTING SUCH EASEMENT, IT IS PRUDENT TO CONTACT THE HOLDER OF THE PIPELINE EASEMENT BEFORE PERFORMING WORK WITHIN 25 FEET OF THE PIPELINE.

NOTES:

1. SEE EA-1 FOR ALL PROPOSED EASEMENTS AND EXISTING EASEMENTS TO BE EXTINGUISHED.
2. PROPOSED CURB SHOWN ON THIS PLAN IS TO BE BELGIAN BLOCK.
3. UNIT #'S 645-647, 658-668 & 681-778 SHALL HAVE GARAGES LOADED FROM PRIVATE DRIVES. STREET ADDRESSES WILL BE POSTED ALONG PRIVATE DRIVES FOR UNITS WITH ONLY PRIVATE DRIVE ACCESS.
4. ALL PRIVATE DRIVES ARE TO BE CONSIDERED PUBLIC EASEMENTS FOR PUBLIC ACCESS AND ALL UTILITIES.
5. EGRETON ROAD, TROW STREET, HERR STREET, AND BULLFINCH LANE ARE PRIVATE STREETS TO BE OWNED AND MAINTAINED BY THE NEIGHBORHOOD ASSOCIATION (NA). PARADE STREET IS A PUBLIC STREET.
6. EACH DWELLING UNIT WILL HAVE INDIVIDUAL REFUSE PICKUP. ALL RESIDENTIAL UNIT OWNERS ARE REQUIRED TO PLACE REFUSE AT A COLLECTION POINT ACCESSIBLE FOR TRUCK PICKUP, AS DIRECTED BY THE NEIGHBORHOOD ASSOCIATION DOCUMENTS. HOMEOWNERS WILL BE REQUIRED TO BRING REFUSE TO END OF DRIVES.
7. EACH PARKING SPACE ADJACENT TO AN ISLAND AT THE END OF A PARKING ROW HAS AN ADDITIONAL TWO (2) FEET OF PAVING IN ADDITION TO THE REQUIRED PARKING WIDTH.
8. SEE SHEET LY-3 STREET ADDRESSES (PENDING STREET NAME APPROVAL).
9. SEE SHEET LY-5, LY-6, AND LY-7 FOR LOT AREAS, BEARINGS AND DISTANCES.
10. NEIGHBORHOOD ASSOCIATION TO MAINTAIN AND KEEP CLEAR ALL SNOW EASEMENTS.
11. THE SPEED LIMIT FOR STREETS IN NEIGHBORHOOD 8.2 SHALL BE POSTED AT 15 MPH.
12. THE FIRST 20' OF ANY DRIVEWAY THAT ENTERS ONTO A STREET SHALL HAVE A MAXIMUM SLOPE OF 7% (SECTION 192-57.B.3.c[2]).

DATE	REVISIONS
10/4/22	REV. FOR NEW CH&N HOMESITES
8/29/22	REV. PER TWP. AND CH&N COMMENTS
8/11/22	REV. PER BUCKEYE EMAIL DATED AUGUST 5, 2022
7/27/22	REV. PER BUCKEYE AND TWP. COMMENTS
6/20/22	ADDRESSED LATWP ZONING COMMENTS
6/9/22	REV. PER LATWP LETTER DATED MAY 16, 2022
6/2/22	ADDED POTHOLE DATA

Section Number: LY-2

10/13/2022 10:05 AM L:\15-100-31\SHEETS\PRELIMINARY-FINAL\11 LY-02.DWG

Sheet Number: 11 of 64

Project Number: 15-100-31

Date: APRIL 12, 2022

ARCONA NEIGHBORHOOD 8.2

Lower Allen Township - Cumberland County, PA

CHARTER Homes & Neighborhoods

LAYOUT PLAN

Drafting: D. TURNER

Checked by: –

Scale: 1"=50'

0 25 50 100 150

Project Manager: DAVID B. KEGERIZE PE

Project Engineer: G. MITCHELL KING PE, PLS

Project Surveyor: MATTHEW A. WAYMAN PLS

Seal: COMMONWEALTH OF PENNSYLVANIA REGISTERED PROFESSIONAL ENGINEER G. MITCHELL KING 10/6/22

TOWNE SQUARE ENGINEERING
313 W. Liberty St., Suite 241
Lancaster, PA 17603
Phone: (717) 283-4538
Civil Engineers & Land Planners

PRELIMINARY / FINAL

LOT #	Approved Address	Phase No.
584	Eliminated	8.1
635	3111 Egreton Road Mechanicsburg PA 17055	8.2
636	3113 Egreton Road Mechanicsburg PA 17055	8.2
637	3115 Egreton Road Mechanicsburg PA 17055	8.2
638	3117 Egreton Road Mechanicsburg PA 17055	8.2
639	3119 Egreton Road Mechanicsburg PA 17055	8.2
640	3121 Egreton Road Mechanicsburg PA 17055	8.2
641	3123 Egreton Road Mechanicsburg PA 17055	8.2
642	3125 Egreton Road Mechanicsburg PA 17055	8.2
643	3127 Egreton Road Mechanicsburg PA 17055	8.2
644	3129 Egreton Road Mechanicsburg PA 17055	8.2
645	3131 Egreton Road Mechanicsburg PA 17055	8.2
646	1298 Miers Place Mechanicsburg PA 17055	8.2
647	1300 Miers Place Mechanicsburg PA 17055	8.2
648	3132 Herr Street Mechanicsburg PA 17055	8.2
649	3130 Herr Street Mechanicsburg PA 17055	8.2
650	3128 Herr Street Mechanicsburg PA 17055	8.2
651	3126 Herr Street Mechanicsburg PA 17055	8.2
652	3124 Herr Street Mechanicsburg PA 17055	8.2
653	3122 Herr Street Mechanicsburg PA 17055	8.2
654	3120 Herr Street Mechanicsburg PA 17055	8.2
655	3118 Herr Street Mechanicsburg PA 17055	8.2
656	3116 Herr Street Mechanicsburg PA 17055	8.2
657	3112 Herr Street Mechanicsburg PA 17055	8.2
658	3111 Herr Street Mechanicsburg PA 17055	8.2
659	3113 Herr Street Mechanicsburg PA 17055	8.2
660	3115 Herr Street Mechanicsburg PA 17055	8.2
661	3116 Egreton Road Mechanicsburg PA 17055	8.2
662	3114 Egreton Road Mechanicsburg PA 17055	8.2
663	3112 Egreton Road Mechanicsburg PA 17055	8.2
664	3233 Parade Street Mechanicsburg PA 17055	8.2
665	3235 Parade Street Mechanicsburg PA 17055	8.2
666	3237 Parade Street Mechanicsburg PA 17055	8.2
667	3239 Parade Street Mechanicsburg PA 17055	8.2
668	3110 Herr Street Mechanicsburg PA 17055	8.2
669	3108 Herr Street Mechanicsburg PA 17055	8.2
670	3106 Herr Street Mechanicsburg PA 17055	8.2
671	3104 Herr Street Mechanicsburg PA 17055	8.2
672	3102 Herr Street Mechanicsburg PA 17055	8.2
673	3100 Herr Street Mechanicsburg PA 17055	8.2
674	3098 Herr Street Mechanicsburg PA 17055	8.2
675	3096 Herr Street Mechanicsburg PA 17055	8.2
676	3094 Herr Street Mechanicsburg PA 17055	8.2
677	3117 Bullfinch Lane Mechanicsburg PA 17055	8.2
678	3115 Bullfinch Lane Mechanicsburg PA 17055	8.2
679	3113 Bullfinch Lane Mechanicsburg PA 17055	8.2
680	3111 Bullfinch Lane Mechanicsburg PA 17055	8.2
681	3093 Egreton Road Mechanicsburg PA 17055	8.2
682	3091 Egreton Road Mechanicsburg PA 17055	8.2
683	1311 Miers Place Mechanicsburg PA 17055	8.2
684	1313 Miers Place Mechanicsburg PA 17055	8.2
685	1315 Miers Place Mechanicsburg PA 17055	8.2
686	1317 Miers Place Mechanicsburg PA 17055	8.2
687	1308 Miers Place Mechanicsburg PA 17055	8.2
688	1306 Miers Place Mechanicsburg PA 17055	8.2
689	1304 Miers Place Mechanicsburg PA 17055	8.2
690	1302 Miers Place Mechanicsburg PA 17055	8.2
691	3117 Herr Street Mechanicsburg PA 17055	8.2
692	3119 Herr Street Mechanicsburg PA 17055	8.2
693	3121 Herr Street Mechanicsburg PA 17055	8.2
694	3123 Herr Street Mechanicsburg PA 17055	8.2
695	3125 Herr Street Mechanicsburg PA 17055	8.2
696	3116 Trow Street Mechanicsburg PA 17055	8.2
697	3115 Trow Street Mechanicsburg PA 17055	8.2
698	3113 Trow Street Mechanicsburg PA 17055	8.2
699	3111 Trow Street Mechanicsburg PA 17055	8.2
700	3124 Herr Street Mechanicsburg PA 17055	8.2
701	3122 Herr Street Mechanicsburg PA 17055	8.2
702	3120 Herr Street Mechanicsburg PA 17055	8.2
703	3118 Herr Street Mechanicsburg PA 17055	8.2
704	3230 Parade Street Mechanicsburg PA 17055	8.2
705	3232 Parade Street Mechanicsburg PA 17055	8.2
706	3234 Parade Street Mechanicsburg PA 17055	8.2
707	3236 Parade Street Mechanicsburg PA 17055	8.2
708	3238 Parade Street Mechanicsburg PA 17055	8.2
709	3240 Parade Street Mechanicsburg PA 17055	8.2
710	3242 Parade Street Mechanicsburg PA 17055	8.2
711	3244 Parade Street Mechanicsburg PA 17055	8.2
712	3246 Parade Street Mechanicsburg PA 17055	8.2
713	1316 Chandle Court Mechanicsburg PA 17055	8.2
714	1314 Chandle Court Mechanicsburg PA 17055	8.2
715	1312 Chandle Court Mechanicsburg PA 17055	8.2
716	1311 Chandle Court Mechanicsburg PA 17055	8.2
717	1313 Chandle Court Mechanicsburg PA 17055	8.2
718	1315 Chandle Court Mechanicsburg PA 17055	8.2
719	1311 Canning Way Mechanicsburg PA 17055	8.2
720	1313 Canning Way Mechanicsburg PA 17055	8.2
721	1315 Canning Way Mechanicsburg PA 17055	8.2
722	1317 Canning Way Mechanicsburg PA 17055	8.2
723	1312 Breeches Way Mechanicsburg PA 17055	8.2
724	1314 Breeches Way Mechanicsburg PA 17055	8.2
725	1316 Breeches Way Mechanicsburg PA 17055	8.2
726	1318 Breeches Way Mechanicsburg PA 17055	8.2
727	3100 Egreton Road Mechanicsburg PA 17055	8.2
728	3098 Egreton Road Mechanicsburg PA 17055	8.2
729	3096 Egreton Road Mechanicsburg PA 17055	8.2
730	3094 Egreton Road Mechanicsburg PA 17055	8.2
731	3092 Egreton Road Mechanicsburg PA 17055	8.2
732	3090 Egreton Road Mechanicsburg PA 17055	8.2
733	3088 Egreton Road Mechanicsburg PA 17055	8.2
734	3086 Egreton Road Mechanicsburg PA 17055	8.2
735	3084 Egreton Road Mechanicsburg PA 17055	8.2
736	3082 Egreton Road Mechanicsburg PA 17055	8.2
737	3112 Bullfinch Lane Mechanicsburg PA 17055	8.2
738	3114 Bullfinch Lane Mechanicsburg PA 17055	8.2
739	3116 Bullfinch Lane Mechanicsburg PA 17055	8.2
740	3118 Bullfinch Lane Mechanicsburg PA 17055	8.2
741	3120 Bullfinch Lane Mechanicsburg PA 17055	8.2
742	3122 Bullfinch Lane Mechanicsburg PA 17055	8.2
743	3089 Herr Street Mechanicsburg PA 17055	8.2
744	3091 Herr Street Mechanicsburg PA 17055	8.2
745	3093 Herr Street Mechanicsburg PA 17055	8.2
746	3095 Herr Street Mechanicsburg PA 17055	8.2
747	3097 Herr Street Mechanicsburg PA 17055	8.2
748	3101 Herr Street Mechanicsburg PA 17055	8.2
749	3103 Herr Street Mechanicsburg PA 17055	8.2
750	3105 Herr Street Mechanicsburg PA 17055	8.2
751	3107 Herr Street Mechanicsburg PA 17055	8.2
752	3109 Herr Street Mechanicsburg PA 17055	8.2
753	1311 Arlington Way Mechanicsburg PA 17055	8.2
754	1313 Arlington Way Mechanicsburg PA 17055	8.2
755	1315 Arlington Way Mechanicsburg PA 17055	8.2
756	1317 Arlington Way Mechanicsburg PA 17055	8.2
757	1319 Arlington Way Mechanicsburg PA 17055	8.2
758	1321 Arlington Way Mechanicsburg PA 17055	8.2
759	1323 Arlington Way Mechanicsburg PA 17055	8.2
760	1311 Carnegie Way Mechanicsburg PA 17055	8.2
761	1313 Carnegie Way Mechanicsburg PA 17055	8.2
762	1315 Carnegie Way Mechanicsburg PA 17055	8.2
763	1317 Carnegie Way Mechanicsburg PA 17055	8.2
764	1319 Carnegie Way Mechanicsburg PA 17055	8.2
765	1321 Carnegie Way Mechanicsburg PA 17055	8.2
766	1323 Carnegie Way Mechanicsburg PA 17055	8.2
767	1325 Carnegie Way Mechanicsburg PA 17055	8.2
768	1327 Carnegie Way Mechanicsburg PA 17055	8.2
769	1328 Carnegie Way Mechanicsburg PA 17055	8.2
770	1326 Carnegie Way Mechanicsburg PA 17055	8.2
771	1324 Carnegie Way Mechanicsburg PA 17055	8.2
772	1322 Carnegie Way Mechanicsburg PA 17055	8.2
773	1322 Barnard Street Mechanicsburg PA 17055	8.2
774	1320 Barnard Street Mechanicsburg PA 17055	8.2
775	1318 Barnard Street Mechanicsburg PA 17055	8.2
776	1316 Barnard Street Mechanicsburg PA 17055	8.2
777	1314 Barnard Street Mechanicsburg PA 17055	8.2
778	1312 Barnard Street Mechanicsburg PA 17055	8.2

NOTES:

1. SEE EA-1 FOR ALL PROPOSED EASEMENTS AND EXISTING EASEMENTS TO BE EXTINGUISHED.
2. PROPOSED CURB SHOWN ON THIS PLAN IS TO BE BELGIAN BLOCK.
3. UNIT #'S 645-647, 658-668 & 681-778 SHALL HAVE GARAGES LOADED FROM PRIVATE DRIVES. STREET ADDRESSES WILL BE POSTED ALONG PRIVATE DRIVES FOR UNITS WITH ONLY PRIVATE DRIVE ACCESS.
4. ALL PRIVATE DRIVES ARE TO BE CONSIDERED PUBLIC EASEMENTS FOR PUBLIC ACCESS AND ALL UTILITIES.
5. EGRETON ROAD, TROW STREET, HERR STREET, AND BULLFINCH LANE ARE PRIVATE STREETS TO BE OWNED AND MAINTAINED BY THE NEIGHBORHOOD ASSOCIATION (NA). PARADE STREET IS A PUBLIC STREET.
6. EACH DWELLING UNIT WILL HAVE INDIVIDUAL REFUSE PICKUP. ALL RESIDENTIAL UNIT OWNERS ARE REQUIRED TO PLACE REFUSE AT A COLLECTION POINT ACCESSIBLE FOR TRUCK PICKUP, AS DIRECTED BY THE NEIGHBORHOOD ASSOCIATION DOCUMENTS. HOMEOWNERS WILL BE REQUIRED TO BRING REFUSE TO END OF DRIVES.
7. EACH PARKING SPACE ADJACENT TO AN ISLAND AT THE END OF A PARKING ROW HAS AN ADDITIONAL TWO (2) FEET OF PAVING IN ADDITION TO THE REQUIRED PARKING WIDTH.
8. SEE SHEET LY-3 STREET ADDRESSES (PENDING STREET NAME APPROVAL).
9. SEE SHEET LY-5, LY-6, AND LY-7 FOR LOT AREAS, BEARINGS AND DISTANCES.
10. NEIGHBORHOOD ASSOCIATION TO MAINTAIN AND KEEP CLEAR ALL SNOW EASEMENTS.
11. THE SPEED LIMIT FOR STREETS IN NEIGHBORHOOD 8.2 SHALL BE POSTED AT 15 MPH.
12. THE FIRST 20' OF ANY DRIVEWAY THAT ENTERS ONTO A STREET SHALL HAVE A MAXIMUM SLOPE OF 7% (SECTION 192-57.B.3.c[2]).

(N-1) BUCKEYE 24-INCH HIGH PRESSURE PETROLEUM PRODUCTS PIPELINE EASEMENT DESCRIBED IN MISC. BOK 127, PAGE 115
THE WIDTH OF PIPELINE EASEMENT IS NOT DEFINED IN THE INSTRUMENTS GRANTING SUCH EASEMENT. ALTHOUGH NOT SPECIFICALLY REQUIRED IN THE INSTRUMENT GRANTING SUCH EASEMENT, IT IS PRUDENT TO CONTACT THE HOLDER OF THE PIPELINE EASEMENT BEFORE PERFORMING WORK WITHIN 25 FEET OF THE PIPELINE.

(N-2) UGI ENERGY SERVICES INC., FORMERLY NISOURCE MIDSTREAM SERVICE, LLC EASEMENT DESCRIBED IN MISC. BOOK 81, PAGE 561
THE WIDTH OF PIPELINE EASEMENT IS NOT DEFINED IN THE INSTRUMENT GRANTING SUCH EASEMENT. ALTHOUGH NOT SPECIFICALLY REQUIRED IN THE INSTRUMENT GRANTING SUCH EASEMENT, IT IS PRUDENT TO CONTACT THE HOLDER OF THE PIPELINE EASEMENT BEFORE PERFORMING WORK WITHIN 25 FEET OF THE PIPELINE.

Sheet Number: 12 of 64
Project Number: 15-100-31
Date: APRIL 12, 2022

ARCONA NEIGHBORHOOD 8.2

Lower Allen Township - Cumberland County, PA

CHARTER Homes & Neighborhoods

LAYOUT PLAN

Drafting: D TURNER
Checked by: —
Scale: 1"=50'
Project Manager: DAVID B. KEGERIZE PE
Project Engineer: G. MITCHELL KING PE, PLS
Project Surveyor: MATTHEW A. WAYMAN PLS
Seal: COMMONWEALTH OF PENNSYLVANIA REGISTERED PROFESSIONAL ENGINEER G. MITCHELL KING 10/6/22

TOWNE SQUARE ENGINEERING
313 W. Liberty St., Suite 241
Lancaster, PA 17603
Phone: (717) 283-4538
Civil Engineers & Land Planners

DATE	REVISIONS
10/4/22	REV. FOR NEW CH&N HOMESITES
8/29/22	REV. PER TWP. AND CH&N COMMENTS
8/11/22	REV. PER BUCKEYE EMAIL DATED AUGUST 5, 2022
7/27/22	REV. PER BUCKEYE AND TWP. COMMENTS
6/20/22	ADDRESSED LATWP ZONING COMMENTS
6/9/22	REV. PER LATWP LETTER DATED MAY 16, 2022
6/2/22	ADDED POTHOLE DATA

Section Number: LY-3

L:\15-100-31\SHEETS\PRELIMINARY-FINAL\12 LY-03.DWG
10/13/2022 10:07 AM

PRELIMINARY / FINAL

(N-1) BUCKEYE 24-INCH HIGH PRESSURE PETROLEUM PRODUCTS PIPELINE EASEMENT DESCRIBED IN MISC. BOK 127, PAGE 115
THE WIDTH OF PIPELINE EASEMENT IS NOT DEFINED IN THE INSTRUMENTS GRANTING SUCH EASEMENT. ALTHOUGH NOT SPECIFICALLY REQUIRED IN THE INSTRUMENT GRANTING SUCH EASEMENT, IT IS PRUDENT TO CONTACT THE HOLDER OF THE PIPELINE EASEMENT BEFORE PERFORMING WORK WITHIN 25 FEET OF THE PIPELINE.

(N-2) UGI ENERGY SERVICES INC., FORMERLY NISOURCE MIDSTREAM SERVICE, LLC EASEMENT DESCRIBED IN MISC. BOOK 81, PAGE 561
THE WIDTH OF PIPELINE EASEMENT IS NOT DEFINED IN THE INSTRUMENT GRANTING SUCH EASEMENT. ALTHOUGH NOT SPECIFICALLY REQUIRED IN THE INSTRUMENT GRANTING SUCH EASEMENT, IT IS PRUDENT TO CONTACT THE HOLDER OF THE PIPELINE EASEMENT BEFORE PERFORMING WORK WITHIN 25 FEET OF THE PIPELINE.

NOTES:

1. SEE EA-1 FOR ALL PROPOSED EASEMENTS AND EXISTING EASEMENTS TO BE EXTINGUISHED.
2. PROPOSED CURB SHOWN ON THIS PLAN IS TO BE BELGIAN BLOCK.
3. UNIT #'S 645-647, 658-668 & 681-778 SHALL HAVE GARAGES LOADED FROM PRIVATE DRIVES. STREET ADDRESSES WILL BE POSTED ALONG PRIVATE DRIVES FOR UNITS WITH ONLY PRIVATE DRIVE ACCESS.
4. ALL PRIVATE DRIVES ARE TO BE CONSIDERED PUBLIC EASEMENTS FOR PUBLIC ACCESS AND ALL UTILITIES.
5. EGRETON ROAD, TROW STREET, HERR STREET, AND BULLFINCH LANE ARE PRIVATE STREETS TO BE OWNED AND MAINTAINED BY THE NEIGHBORHOOD ASSOCIATION (NA). PARADE STREET IS A PUBLIC STREET.
6. EACH DWELLING UNIT WILL HAVE INDIVIDUAL REFUSE PICKUP. ALL RESIDENTIAL UNIT OWNERS ARE REQUIRED TO PLACE REFUSE AT A COLLECTION POINT ACCESSIBLE FOR TRUCK PICKUP, AS DIRECTED BY THE NEIGHBORHOOD ASSOCIATION DOCUMENTS. HOMEOWNERS WILL BE REQUIRED TO BRING REFUSE TO END OF DRIVES.
7. EACH PARKING SPACE ADJACENT TO AN ISLAND AT THE END OF A PARKING ROW HAS AN ADDITIONAL TWO (2) FEET OF PAVING IN ADDITION TO THE REQUIRED PARKING WIDTH.
8. SEE SHEET LY-3 STREET ADDRESSES (PENDING STREET NAME APPROVAL).
9. SEE SHEET LY-5, LY-6, AND LY-7 FOR LOT AREAS, BEARINGS AND DISTANCES.
10. NEIGHBORHOOD ASSOCIATION TO MAINTAIN AND KEEP CLEAR ALL SNOW EASEMENTS.
11. THE SPEED LIMIT FOR STREETS IN NEIGHBORHOOD 8.2 SHALL BE POSTED AT 15 MPH.
12. THE FIRST 20' OF ANY DRIVEWAY THAT ENTERS ONTO A STREET SHALL HAVE A MAXIMUM SLOPE OF 7% (SECTION 192-57.B.3.c[2]).

Sheet Number: 13 of 64
Project Number: 15-100-31
Date: APRIL 12, 2022

ARCONA NEIGHBORHOOD 8.2

Lower Allen Township - Cumberland County, PA

CHARTER Homes & Neighborhoods

LAYOUT PLAN

Drafting: D. TURNER
Checked by: –
Scale: 1"=50'
0 25 50 100 150

Project Manager: DAVID B. KEGERIZE PE
Project Engineer: G. MITCHELL KING PE, PLS
Project Surveyor: MATTHEW A. WAYMAN PLS

Seal: COMMONWEALTH OF PENNSYLVANIA REGISTERED PROFESSIONAL ENGINEER G. MITCHELL KING 10/6/22

TOWNE SQUARE ENGINEERING
313 W. Liberty St., Suite 241
Lancaster, PA 17603
Phone: (717) 283-4538
Civil Engineers & Land Planners

DATE	REVISIONS
10/4/22	REV. FOR NEW CHAN HOMESITES
8/29/22	REV. PER TWP. AND CH&N COMMENTS
8/11/22	REV. PER BUCKEYE EMAIL DATED AUGUST 5, 2022
7/27/22	REV. PER BUCKEYE AND TWP. COMMENTS
6/20/22	ADDRESSED LA TWP ZONING COMMENTS
6/9/22	REV. PER LA TWP LETTER DATED MAY 16, 2022
6/2/22	ADDED POTHOLE DATA

Section Number: LY-4

10/13/2022 10:17 AM L:\15-100-31\SHEETS\PRELIMINARY-FINAL\13 LY-04.DWG

PRELIMINARY / FINAL

(N-1) BUCKEYE 24-INCH HIGH PRESSURE PETROLEUM PRODUCTS PIPELINE EASEMENT DESCRIBED IN MISC. BOK 127, PAGE 115
THE WIDTH OF PIPELINE EASEMENT IS NOT DEFINED IN THE INSTRUMENTS GRANTING SUCH EASEMENT. ALTHOUGH NOT SPECIFICALLY REQUIRED IN THE INSTRUMENT GRANTING SUCH EASEMENT, IT IS PRUDENT TO CONTACT THE HOLDER OF THE PIPELINE EASEMENT BEFORE PERFORMING WORK WITHIN 25 FEET OF THE PIPELINE.

(N-2) UGI ENERGY SERVICES INC., FORMERLY NISOURCE MIDSTREAM SERVICE, LLC EASEMENT DESCRIBED IN MISC. BOOK 81, PAGE 561
THE WIDTH OF PIPELINE EASEMENT IS NOT DEFINED IN THE INSTRUMENT GRANTING SUCH EASEMENT. ALTHOUGH NOT SPECIFICALLY REQUIRED IN THE INSTRUMENT GRANTING SUCH EASEMENT, IT IS PRUDENT TO CONTACT THE HOLDER OF THE PIPELINE EASEMENT BEFORE PERFORMING WORK WITHIN 25 FEET OF THE PIPELINE.

NOTES:

- See sheet BE-1 for building setback and yard requirements for Lots I, L, M, N, O, and S.
- For lots that have frontage along a street other than an alley (including block lots on which multiple dwellings or buildings will be constructed and on dwelling lots on which one dwelling is to be constructed), the street frontage will establish the front yard per the definition of "lot line, front" under Section 220-6.C. On a corner lot, all lot lines which abut a street other than an alley shall be front lot lines and each lot line opposite each front line shall be a side lot line. On a through lot, the front lot line shall be the lot line which abuts the street providing the primary access to the lot.
- Upon completion of construction of proposed dwellings on each of Lots I, L, M, N, O and S, each such lot shall not be further subdivided.
- The separation of buildings on Lots I, L, M, N, O and S is regulated by the applicable provisions of building codes adopted under the Pennsylvania Construction Code Act.
- Notwithstanding the foregoing, buildings located on opposite sides of an alley shall be separated by a minimum distance of 30 feet including architectural projections.

Sheet Number: 14 of 64
Project Number: 15-100-31
Date: APRIL 12, 2022

ARCONA NEIGHBORHOOD 8.2

Lower Allen Township - Cumberland County, PA
CHARTER Homes & Neighborhoods

PARCEL LABEL PLAN

Drafting: D TURNER
Checked by: -
Scale: 1"=50'
Project Manager: DAVID B. KEGERIZE PE
Project Engineer: G. MITCHELL KING PE, PLS
Project Surveyor: MATTHEW A. WAYMAN PLS
Seal: COMMONWEALTH OF PENNSYLVANIA REGISTERED PROFESSIONAL LICENSE No. 024E035 G. MITCHELL KING 10/13/22

TOWNE SQUARE ENGINEERING
313 W. Liberty St., Suite 241
Lancaster, PA 17603
Phone: (717) 283-4538
Civil Engineers & Land Planners

DATE	REVISIONS
10/4/22	REV. FOR NEW CH&N HOMESITES
8/29/22	REV. PER TWP. AND CH&N COMMENTS
8/11/22	REV. PER BUCKEYE EMAIL DATED AUGUST 5, 2022
7/27/22	REV. PER BUCKEYE AND TWP. COMMENTS
6/20/22	ADDRESSED LATWP ZONING COMMENTS
6/9/22	REV. PER LATWP LETTER DATED MAY 16, 2022
6/2/22	ADDED POTHOLE DATA

Section Number: LY-5
L:\15-100-31\SHEETS\PRELIMINARY-FINAL\14 LY-05.DWG
10/13/2022 10:10 AM

PRELIMINARY / FINAL

RIGHT-OF-WAY CURVE TABLE			
CURVE	RADIUS	LENGTH	CHORD
C13	15.00'	19.26'	N 66°16'24" E 17.96'
C14	141.00'	16.65'	S 73°33'57" E 16.64'
C15	141.00'	87.76'	S 52°21'12" E 86.35'
C16	15.00'	19.63'	S 2°58'38" W 18.26'
C17	15.00'	23.56'	S 85°28'38" W 21.21'
C18	189.00'	46.44'	N 56°33'41" W 46.32'
C19	141.00'	32.28'	N 57°02'26" W 32.21'
C20	15.00'	20.94'	N 10°29'35" W 19.28'
C21	15.00'	24.64'	N 81°34'38" W 21.96'
C23	189.00'	117.63'	N 52°21'12" W 115.74'
C24	144.00'	12.45'	N 41°06'30" W 12.44'
C25	189.00'	22.31'	N 73°33'57" W 22.30'
C26	161.00'	14.70'	N 68°05'50" W 14.70'
C27	189.00'	43.28'	S 57°02'26" E 43.18'
C29	141.00'	34.64'	S 56°33'41" E 34.56'
C30	141.00'	17.01'	S 46°04'02" E 17.00'
C31	189.00'	25.96'	S 46°32'47" E 25.94'
C35	139.00'	62.76'	N 57°46'46" W 62.22'
C38	161.00'	15.84'	N 47°39'51" W 15.83'
C39	50.00'	33.09'	N 31°31'31" W 32.49'
C40	40.00'	190.15'	S 31°14'48" W 55.39'
C41	50.00'	51.87'	S 75°13'07" E 49.58'
C42	161.00'	70.85'	S 58°06'22" E 70.28'
C43	139.00'	12.69'	S 68°05'50" E 12.69'
C49	15.00'	23.56'	N 83°37'54" W 21.21'
C66	275.00'	138.41'	N 36°56'58" E 136.95'
C76	325.00'	82.47'	S 45°51'43" W 62.37'
C77	15.00'	25.15'	S 88°23'08" W 22.30'
C108	15.00'	23.56'	S 84°31'08" W 21.21'
C109	141.00'	19.37'	N 46°32'47" W 19.35'
C110	189.00'	17.80'	N 45°18'37" W 17.80'
C111	15.00'	23.17'	N 3°45'57" W 20.93'
C112	15.00'	27.49'	S 87°01'22" E 23.80'
C113	141.00'	16.47'	S 31°10'35" E 16.46'
C114	189.00'	74.72'	S 39°09'20" E 74.23'
C115	15.00'	23.56'	S 5°28'52" E 21.21'
C117	141.00'	55.74'	N 39°09'20" W 55.38'
C118	189.00'	22.08'	N 31°10'35" W 22.06'
C119	15.00'	22.49'	N 8°25'22" E 20.44'

CENTERLINE CURVE TABLE			
CURVE	RADIUS	LENGTH	CHORD
C1	165.00'	65.23'	N 39°09'20" W 64.81'
C2	165.00'	19.27'	N 31°10'35" W 19.26'
C3	165.00'	102.70'	N 52°21'12" W 101.05'
C4	165.00'	19.48'	N 73°33'57" W 19.47'
C5	165.00'	22.66'	N 46°32'47" W 22.64'
C6	300.00'	150.99'	N 36°56'58" E 149.40'
C7	165.00'	19.90'	N 46°04'02" E 19.89'
C8	165.00'	40.54'	N 56°33'41" W 40.44'
C9	165.00'	37.78'	N 57°02'26" W 37.70'
C10	300.00'	54.89'	N 27°46'19" E 54.81'
C11	300.00'	96.11'	N 42°11'26" E 95.70'
C12	165.00'	31.36'	N 45°55'22" E 31.32'
C128	165.00'	18.90'	S 43°45'33" W 18.89'
C129	165.00'	12.46'	S 49°12'16" W 12.46'

LOT CURVE TABLE			
CURVE	RADIUS	LENGTH	CHORD
C22	141.00'	1.51'	S 42°55'05" E 1.51'
C28	275.00'	71.70'	S 43°53'55" W 71.50'
C32	189.00'	27.16'	S 66°04'03" E 27.13'
C33	189.00'	11.16'	N 71°52'29" W 11.15'
C34	189.00'	11.16'	S 75°15'25" E 11.15'
C36	189.00'	17.28'	S 53°05'59" E 17.27'
C37	189.00'	26.00'	S 59°39'34" E 25.98'
C44	40.00'	15.64'	S 23°46'02" E 15.54'
C45	15.00'	3.29'	N 46°45'38" E 3.28'
C46	189.00'	0.50'	N 50°24'20" W 0.50'
C47	189.00'	25.46'	S 46°28'15" E 25.44'
C48	40.00'	15.06'	S 85°50'51" W 14.97'
C50	20.00'	39.58'	S 14°35'44" E 33.43'
C51	15.00'	23.56'	S 87°05'30" W 21.21'
C52	15.00'	39.48'	N 27°29'33" E 29.03'
C53	40.00'	4.07'	S 74°11'41" E 4.06'
C54	15.00'	20.88'	S 89°38'08" W 19.24'
C55	15.00'	12.99'	N 74°33'29" E 12.59'
C56	15.00'	7.89'	N 65°33'31" W 7.80'
C59	141.00'	25.43'	S 55°38'53" E 25.40'
C60	141.00'	6.85'	S 62°12'28" E 6.85'
C61	189.00'	30.69'	S 58°56'55" E 30.65'
C63	189.00'	15.75'	N 51°54'36" W 15.75'
C65	141.00'	5.26'	N 75°52'42" W 5.26'
C67	141.00'	11.38'	N 72°29'47" W 11.38'
C68	15.00'	24.64'	N 81°34'38" W 21.96'
C69	189.00'	90.48'	N 48°14'13" W 89.62'
C71	40.00'	23.53'	N 51°49'17" W 23.20'
C72	40.00'	33.92'	S 87°01'38" W 32.92'
C73	40.00'	15.38'	S 51°43'06" W 15.28'
C74	40.00'	8.46'	S 34°39'00" W 8.44'
C75	40.00'	78.16'	N 27°23'11" W 66.31'
C79	15.00'	5.10'	N 29°47'00" E 5.07'
C82	110.00'	19.65'	N 44°38'08" E 19.62'
C92	141.00'	17.86'	N 46°51'10" W 17.85'
C144	85.50'	109.14'	S 65°13'33" W 101.88'

NOTES:

- See sheet BE-1 for building setback and yard requirements for Lots I, L, M, N, O, and S.
- For lots that have frontage along a street other than an alley (including block lots on which multiple dwellings or buildings will be constructed and on dwelling lots on which one dwelling is to be constructed), the street frontage will establish the front yard per the definition of "lot line, front" under Section 220-6.C. On a corner lot, all lot lines which abut a street other than an alley shall be front lot lines and each lot line opposite each front line shall be a side lot line. On a through lot, the front lot line shall be the lot line which abuts the street providing the primary access to the lot.
- Upon completion of construction of proposed dwellings on each of Lots I, L, M, N, O and S, each such lot shall not be further subdivided.
- The separation of buildings on Lots I, L, M, N, O and S is regulated by the applicable provisions of building codes adopted under the Pennsylvania Construction Code Act.
- Notwithstanding the foregoing, buildings located on opposite sides of an alley shall be separated by a minimum distance of 30 feet including architectural projections.

(N-1) BUCKEYE 24-INCH HIGH PRESSURE PETROLEUM PRODUCTS PIPELINE EASEMENT DESCRIBED IN MISC. BOK 127, PAGE 115
THE WIDTH OF PIPELINE EASEMENT IS NOT DEFINED IN THE INSTRUMENTS GRANTING SUCH EASEMENT. ALTHOUGH NOT SPECIFICALLY REQUIRED IN THE INSTRUMENT GRANTING SUCH EASEMENT, IT IS PRUDENT TO CONTACT THE HOLDER OF THE PIPELINE EASEMENT BEFORE PERFORMING WORK WITHIN 25 FEET OF THE PIPELINE.

(N-2) UGI ENERGY SERVICES INC., FORMERLY NISOURCE MIDSTREAM SERVICE, LLC EASEMENT DESCRIBED IN MISC. BOOK 81, PAGE 561
THE WIDTH OF PIPELINE EASEMENT IS NOT DEFINED IN THE INSTRUMENT GRANTING SUCH EASEMENT. ALTHOUGH NOT SPECIFICALLY REQUIRED IN THE INSTRUMENT GRANTING SUCH EASEMENT, IT IS PRUDENT TO CONTACT THE HOLDER OF THE PIPELINE EASEMENT BEFORE PERFORMING WORK WITHIN 25 FEET OF THE PIPELINE.

Sheet Number: 15 of 64
Project Number: 15-100-31
Date: APRIL 12, 2022

ARCONA NEIGHBORHOOD 8.2

Lower Allen Township - Cumberland County, PA

CHARTER Homes & Neighborhoods

PARCEL LABEL PLAN

Project Manager: DAVID B. KEGERIZE PE	Drafting: D TURNER		
Project Engineer: G. MITCHELL KING PE, PLS	Checked by: -		
Project Surveyor: MATTHEW A. WAYMAN PLS	Scale: 1"=50'		

Seal: COMMONWEALTH OF PENNSYLVANIA REGISTERED PROFESSIONAL ENGINEER G. MITCHELL KING No. 044800 10/13/22

TOWNE SQUARE ENGINEERING
313 W. Liberty St., Suite 241
Lancaster, PA 17603
Phone: (717) 283-4538
Civil Engineers & Land Planners

DATE	REVISIONS
10/4/22	REV. FOR NEW CH&H HOMESITES
8/29/22	REV. PER TWP. AND CH&H COMMENTS
8/11/22	REV. PER BUCKEYE EMAIL DATED AUGUST 5, 2022
7/27/22	REV. PER BUCKEYE AND TWP. COMMENTS
6/20/22	ADDRESSED LATWP ZONING COMMENTS
6/9/22	REV. PER LATWP LETTER DATED MAY 16, 2022
6/2/22	ADDED POTHOLE DATA

Section Number: LY-6

10/13/2022 10:05 AM L:\15-100-31\SHEETS\PRELIMINARY-FINAL\15 LY-06.DWG

PRELIMINARY / FINAL

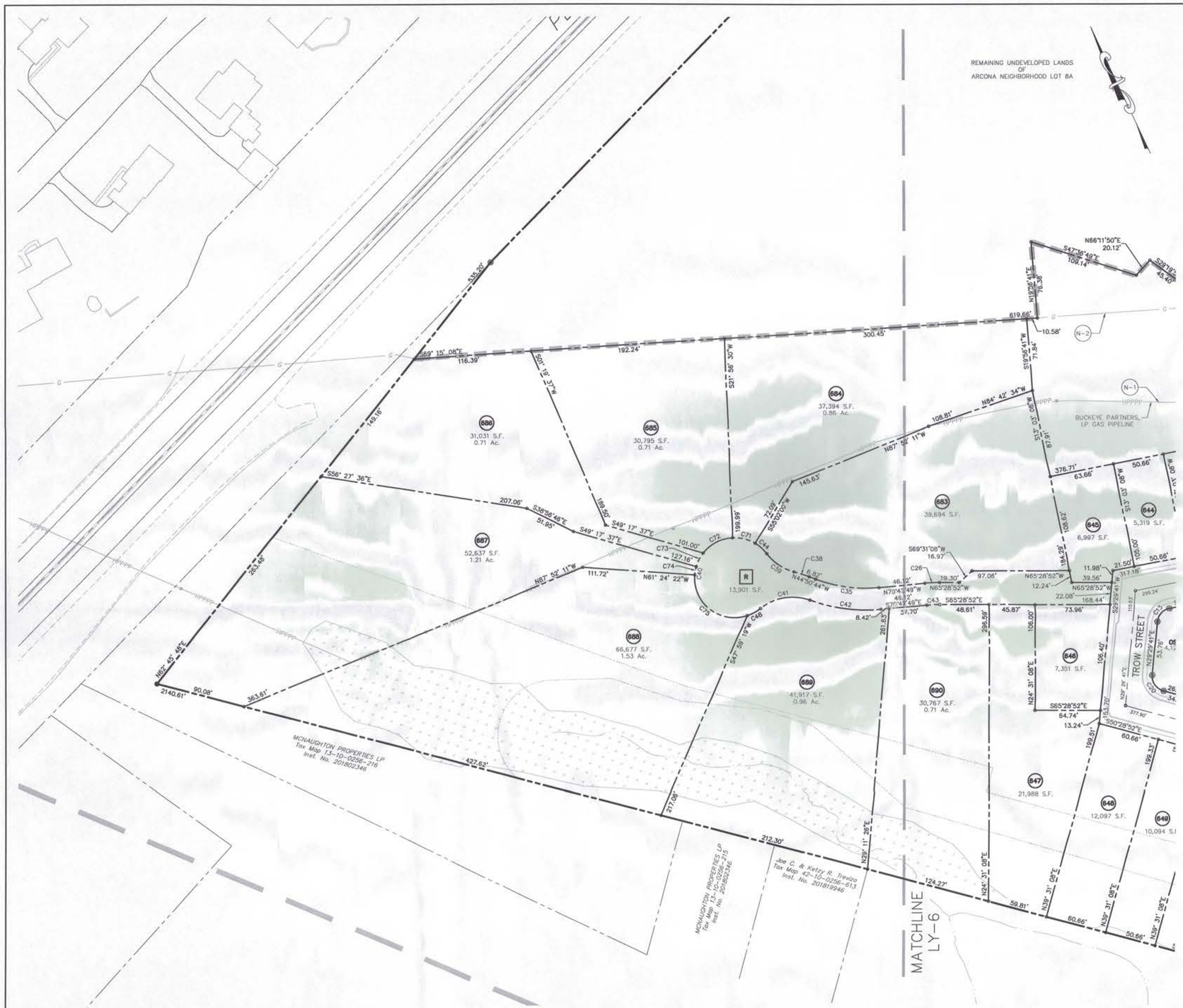

NOTES:

- See sheet BE-1 for building setback and yard requirements for Lots I, L, M, N, O, and S.
- For lots that have frontage along a street other than an alley (including block lots on which multiple dwellings or buildings will be constructed and on dwelling lots on which one dwelling is to be constructed), the street frontage will establish the front yard per the definition of "lot line, front" under Section 220-6.C. On a corner lot, all lot lines which abut a street other than an alley shall be front lot lines and each lot line opposite each front line shall be a side lot line. On a through lot, the front lot line shall be the lot line which abuts the street providing the primary access to the lot.
- Upon completion of construction of proposed dwellings on each of Lots I, L, M, N, O and S, each such lot shall not be further subdivided.
- The separation of buildings on Lots I, L, M, N, O and S is regulated by the applicable provisions of building codes adopted under the Pennsylvania Construction Code Act.
- Notwithstanding the foregoing, buildings located on opposite sides of an alley shall be separated by a minimum distance of 30 feet including architectural projections.

(N-1) BUCKEYE 24-INCH HIGH PRESSURE PETROLEUM PRODUCTS PIPELINE EASEMENT DESCRIBED IN MISC. BOK 127, PAGE 115
THE WIDTH OF PIPELINE EASEMENT IS NOT DEFINED IN THE INSTRUMENTS GRANTING SUCH EASEMENT. ALTHOUGH NOT SPECIFICALLY REQUIRED IN THE INSTRUMENT GRANTING SUCH EASEMENT, IT IS PRUDENT TO CONTACT THE HOLDER OF THE PIPELINE EASEMENT BEFORE PERFORMING WORK WITHIN 25 FEET OF THE PIPELINE.

(N-2) UGI ENERGY SERVICES INC., FORMERLY NISOURCE MIDSTREAM SERVICE, LLC EASEMENT DESCRIBED IN MISC. BOOK 81, PAGE 561
THE WIDTH OF PIPELINE EASEMENT IS NOT DEFINED IN THE INSTRUMENT GRANTING SUCH EASEMENT. ALTHOUGH NOT SPECIFICALLY REQUIRED IN THE INSTRUMENT GRANTING SUCH EASEMENT, IT IS PRUDENT TO CONTACT THE HOLDER OF THE PIPELINE EASEMENT BEFORE PERFORMING WORK WITHIN 25 FEET OF THE PIPELINE.

Sheet Number: 16 of 64
Project Number: 15-100-31
Date: APRIL 12, 2022

ARCONA NEIGHBORHOOD 8.2

Lower Allen Township - Cumberland County, PA
CHARTER Homes & Neighborhoods

PARCEL LABEL PLAN

Project Manager: DAVID B. KEGERIZE PE
Drafting: D TURNER
Project Engineer: G. MITCHELL KING PE, PLS
Checked by: –
Project Surveyor: MATTHEW A. WAYMAN PLS
Scale: 1"=50'
0 25 50 100 150

Seal: COMMONWEALTH OF PENNSYLVANIA REGISTERED PROFESSIONAL ENGINEER G. MITCHELL KING 044594 10/6/22

TOWNE SQUARE ENGINEERING
313 W. Liberty St., Suite 241
Lancaster, PA 17603
Phone: (717) 283-4538
Civil Engineers & Land Planners

DATE	REVISIONS
10/4/22	REV. FOR NEW CHAN HOMESITES
8/29/22	REV. PER TWP. AND CHAN COMMENTS
8/11/22	REV. PER BUCKEYE EMAIL DATED AUGUST 5, 2022
7/27/22	REV. PER BUCKEYE AND TWP. COMMENTS
6/20/22	ADDRESSED LATWP ZONING COMMENTS
6/9/22	REV. PER LATWP LETTER DATED MAY 16, 2022
6/2/22	ADDED POTHOLE DATA

Section Number: LY-7

10/13/2022 10:14 AM L:\15-100-31\SHEETS\PRELIMINARY-FINAL\16 LY-07.DWG

PRELIMINARY / FINAL

NOTES:

- For lots that have frontage along a street other than an alley (including block lots on which multiple dwellings or buildings will be constructed and on dwelling lots on which one dwelling is to be constructed), the street frontage will establish the front yard per the definition of "lot line, front" under Section 220-6.C. On a corner lot, all lot lines which abut a street other than an alley shall be front lot lines and each lot line opposite each front line shall be a side lot line. On a through lot, the front lot line shall be the lot line which abuts the street providing the primary access to the lot.
- Upon completion of construction of proposed dwellings on each of Lots I, L, M, N, O and S, each such lot shall not be further subdivided.
- The separation of buildings on Lots I, L, M, N, O and S is regulated by the applicable provisions of building codes adopted under the Pennsylvania Construction Code Act.
- Notwithstanding the foregoing, buildings located on opposite sides of an alley shall be separated by a minimum distance of 30 feet including architectural projections.

BUILDING	USE DESCRIPTION	SETBACKS	
SF-DETACHED	RESIDENTIAL	FRONT YARD SETBACK	5'
		SIDE YARD SETBACK (10' TOTAL)	5'
		REAR YARD SETBACK	25'
		REAR YARD SETBACK W/ ALLEY	5'
SF-ATTACHED	RESIDENTIAL	FRONT YARD SETBACK	5'
		SIDE YARD SETBACK	8'
		REAR YARD SETBACK	25'
		REAR YARD SETBACK W/ ALLEY	5'

NOTE:

VISUAL OFFSET PROVISIONS WILL BE MET VIA STEPPED ARCHITECTURE AND GRADING VERIFIED AT BUILDING PERMIT APPLICATION.

Sheet Number: 18 of 64

Project Number: 15-100-31

Date: APRIL 12, 2022

ARCONA NEIGHBORHOOD 8.2

Lower Allen Township - Cumberland County, PA

CHARTER Homes & Neighborhoods

BUILDING SETBACK EXHIBIT

Drafting: D TURNER

Checked by: –

Scale: 1" =50'

0 25 50 100 150

Project Manager: DAVID B. KEGERIZE PE

Project Engineer: G. MITCHELL KING PE, PLS

Project Surveyor: MATTHEW A. WAYMAN PLS

Seal: COMMONWEALTH OF PENNSYLVANIA REGISTERED PROFESSIONAL G. MITCHELL KING No. SU050864 10/6/22

TOWNE SQUARE ENGINEERING

313 W. Liberty St., Suite 241
Lancaster, PA 17603
Phone: (717) 283-4538

Civil Engineers & Land Planners

DATE	REVISIONS
10/4/22	REV. FOR NEW CHBN HOMESITES
8/29/22	REV. PER TWP. AND CHBN COMMENTS
8/11/22	REV. PER BUCKEYE EMAIL DATED AUGUST 5, 2022
7/27/22	REV. PER BUCKEYE AND TWP. COMMENTS
6/20/22	ADDRESSED LATWP ZONING COMMENTS
6/9/22	REV. PER LATWP LETTER DATED MAY 16, 2022
6/2/22	ADDED POTHOLE DATA

Section Number: BE-1

10/13/2022 10:06 AM L:\15-100-31\SHEETS\PRELIMINARY-FINAL\18 BE-01.DWG

PRELIMINARY / FINAL

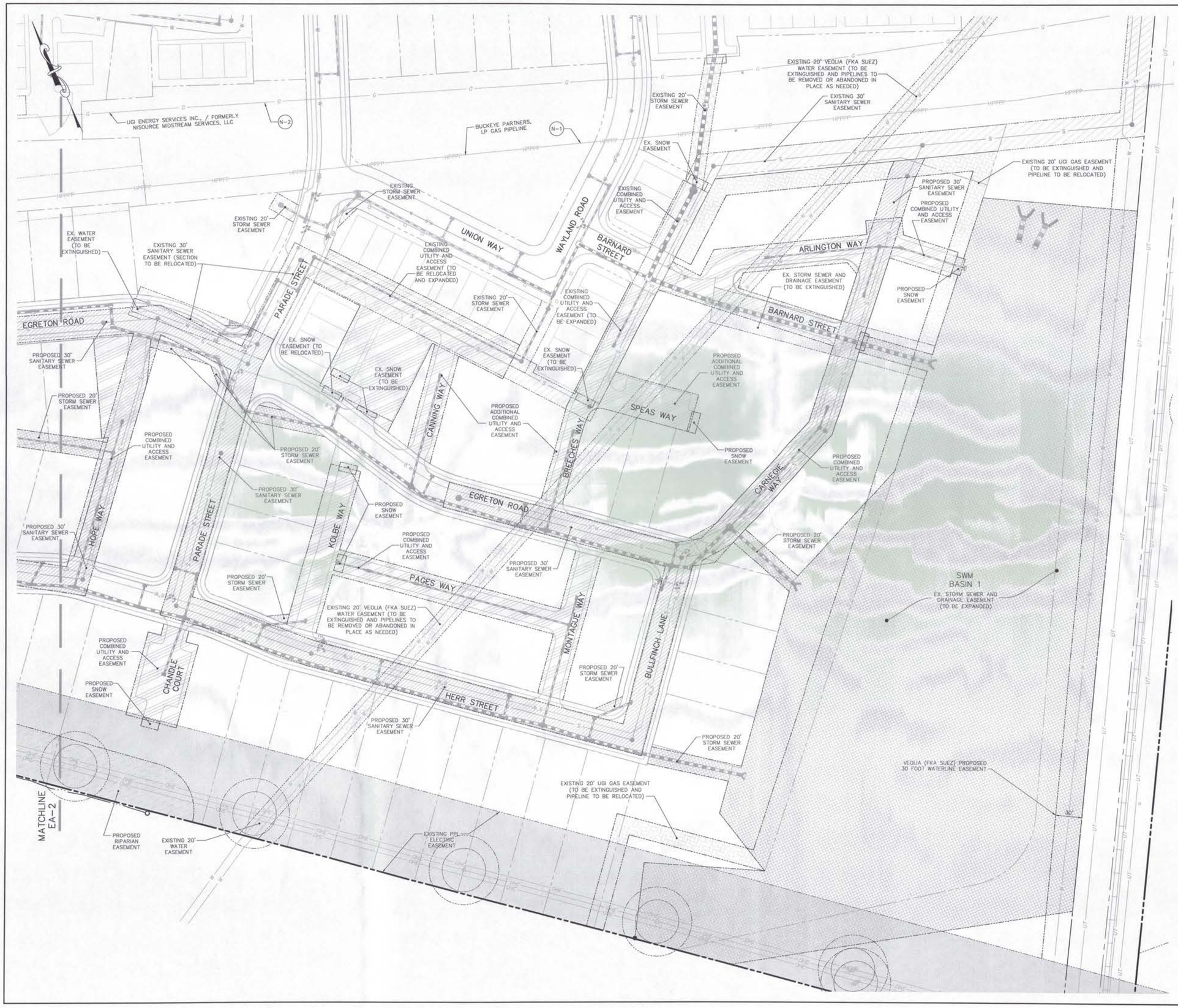

ARCONA PHASE 8.2
EASEMENT LEGEND

- EXISTING STORMWATER MANAGEMENT / DRAINAGE EASEMENT
- PROPOSED STORMWATER MANAGEMENT / DRAINAGE EASEMENT
- EXISTING SANITARY SEWER EASEMENT
- PROPOSED SANITARY SEWER EASEMENT
- PROPOSED WATERLINE EASEMENT
- EXISTING COMBINED UTILITY AND ACCESS EASEMENT
- PROPOSED COMBINED UTILITY AND ACCESS EASEMENT
- EXISTING SNOW EASEMENT
- PROPOSED SNOW EASEMENT
- PROPOSED CONSERVATION EASEMENT
- PROPOSED RIPARIAN EASEMENT
- EXISTING EASEMENTS (OTHER)
- EASEMENTS TO BE EXTINGUISHED

(N-1) BUCKEYE 24-INCH HIGH PRESSURE PETROLEUM PRODUCTS PIPELINE EASEMENT DESCRIBED IN MISC. BOK 127, PAGE 115
THE WIDTH OF PIPELINE EASEMENT IS NOT DEFINED IN THE INSTRUMENTS GRANTING SUCH EASEMENT. ALTHOUGH NOT SPECIFICALLY REQUIRED IN THE INSTRUMENT GRANTING SUCH EASEMENT, IT IS PRUDENT TO CONTACT THE HOLDER OF THE PIPELINE EASEMENT BEFORE PERFORMING WORK WITHIN 25 FEET OF THE PIPELINE.

(N-2) UGI ENERGY SERVICES INC., FORMERLY NISOURCE MIDSTREAM SERVICE, LLC EASEMENT DESCRIBED IN MISC. BOOK 81, PAGE 561
THE WIDTH OF PIPELINE EASEMENT IS NOT DEFINED IN THE INSTRUMENT GRANTING SUCH EASEMENT. ALTHOUGH NOT SPECIFICALLY REQUIRED IN THE INSTRUMENT GRANTING SUCH EASEMENT, IT IS PRUDENT TO CONTACT THE HOLDER OF THE PIPELINE EASEMENT BEFORE PERFORMING WORK WITHIN 25 FEET OF THE PIPELINE.

NOTES:

1. EXISTING UTILITY AND UNDERGROUND PIPELINE EASEMENTS ARE SHOWN ON THE EA SHEETS.
2. SEE EA-1 THRU EA-2 FOR ALL PROPOSED EASEMENTS AND EXISTING EASEMENTS TO BE EXTINGUISHED, RELOCATED OR ENLARGED).
3. SEE EA-3 THRU EA-8 FOR EASEMENT DETAILS AND TABLES.
4. THE ACTUAL LIMITS OF THE UTILITY EASEMENTS WITHIN THE AREAS ON THIS ON THIS PLAN NOTED AS "COMBINED UTILITY AND ACCESS EASEMENTS" ARE SPECIFICALLY SET FORTH IN THE GRANTS OF THOSE EASEMENTS TO THE INDIVIDUAL UTILITY PROVIDER, WHICH GRANTS ARE BEING RECORDED SEPARATE FROM THIS PLAN.

Sheet Number: 19 of 64
Project Number: 15-100-31
Date: APRIL 12, 2022

ARCONA NEIGHBORHOOD 8.2

Lower Allen Township - Cumberland County, PA

CHARTER Homes & Neighborhoods

EASEMENT PLAN - OVERALL

Drafting: D TURNER
Checked by: -
Scale: 1"=50'
0 25 50 100 150

Project Manager: DAVID B. KEGERIZE PE
Project Engineer: G. MITCHELL KING PE, PLS
Project Surveyor: MATTHEW A. WAYMAN PLS

Seal: COMMONWEALTH OF PENNSYLVANIA REGISTERED PROFESSIONAL ENGINEER G. MITCHELL KING 10/3/22

TOWNE SQUARE ENGINEERING
313 W. Liberty St., Suite 241
Lancaster, PA 17603
Phone: (717) 283-4538
Civil Engineers & Land Planners

DATE	REVISIONS
10/4/22	REV. FOR NEW CH&H HOMESITES
8/29/22	REV. PER TWP. AND CH&H COMMENTS
8/11/22	REV. PER BUCKEYE EMAIL DATED AUGUST 5, 2022
7/27/22	REV. PER BUCKEYE AND TWP. COMMENTS
6/20/22	ADDRESSED LATWP ZONING COMMENTS
6/9/22	REV. PER LATWP LETTER DATED MAY 16, 2022
6/2/22	ADDED POTHOLE DATA

Section Number: EA-1

PRELIMINARY / FINAL

10/13/2022 10:08 AM L:\15-100-31\SHEETS\PRELIMINARY-FINAL\26 EA-08.DWG

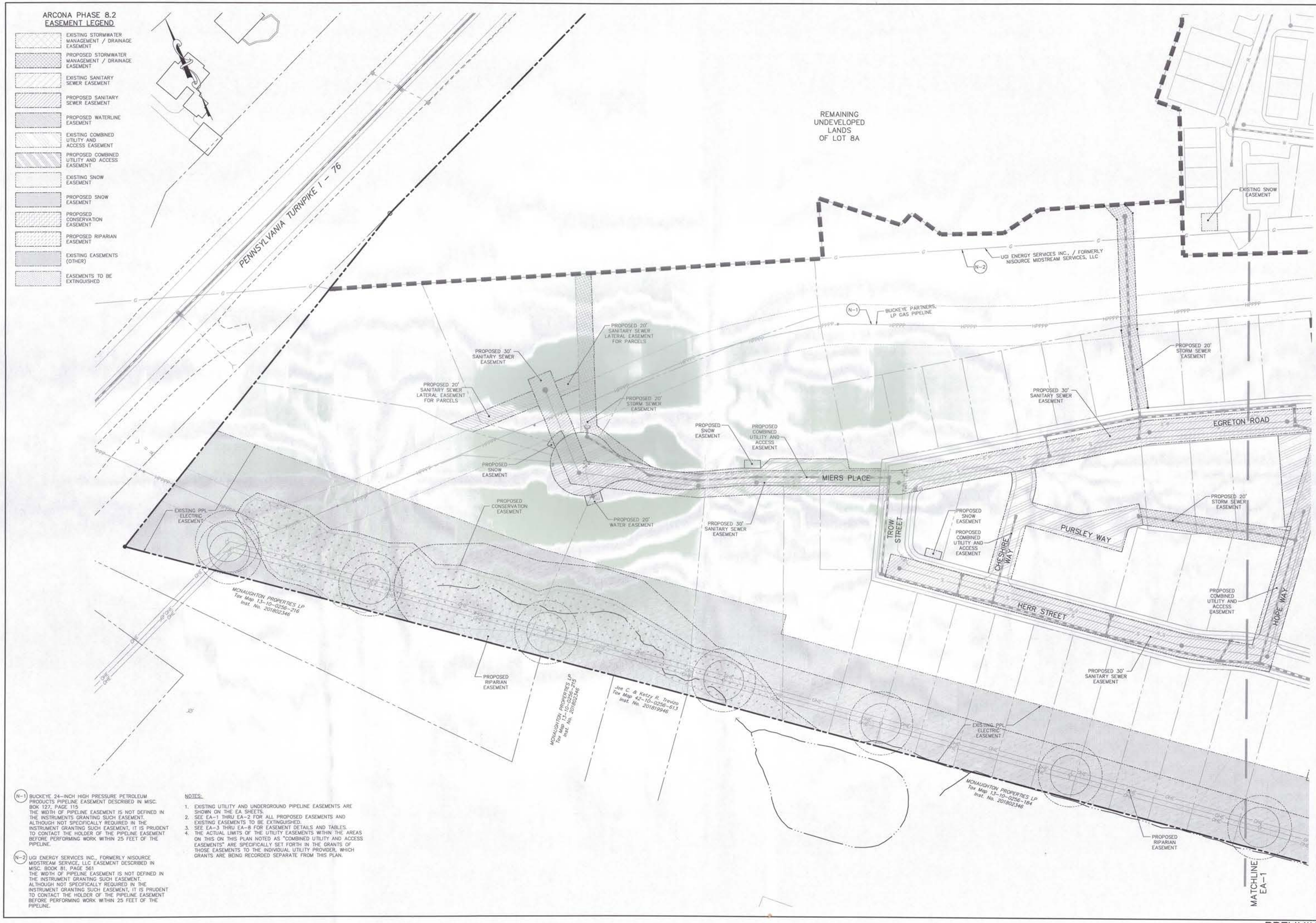

(N-1) BUCKEYE 24-INCH HIGH PRESSURE PETROLEUM PRODUCTS PIPELINE EASEMENT DESCRIBED IN MISC. BOK 127, PAGE 115
THE WIDTH OF PIPELINE EASEMENT IS NOT DEFINED IN THE INSTRUMENTS GRANTING SUCH EASEMENT. ALTHOUGH NOT SPECIFICALLY REQUIRED IN THE INSTRUMENT GRANTING SUCH EASEMENT, IT IS PRUDENT TO CONTACT THE HOLDER OF THE PIPELINE EASEMENT BEFORE PERFORMING WORK WITHIN 25 FEET OF THE PIPELINE.

(N-2) UGI ENERGY SERVICES INC., FORMERLY NISOURCE MIDSTREAM SERVICE, LLC EASEMENT DESCRIBED IN MISC. BOOK 81, PAGE 561
THE WIDTH OF PIPELINE EASEMENT IS NOT DEFINED IN THE INSTRUMENT GRANTING SUCH EASEMENT. ALTHOUGH NOT SPECIFICALLY REQUIRED IN THE INSTRUMENT GRANTING SUCH EASEMENT, IT IS PRUDENT TO CONTACT THE HOLDER OF THE PIPELINE EASEMENT BEFORE PERFORMING WORK WITHIN 25 FEET OF THE PIPELINE.

NOTES:

1. EXISTING UTILITY AND UNDERGROUND PIPELINE EASEMENTS ARE SHOWN ON THE EA SHEETS.
2. SEE EA-1 THRU EA-2 FOR ALL PROPOSED EASEMENTS AND EXISTING EASEMENTS TO BE EXTINGUISHED.
3. SEE EA-3 THRU EA-8 FOR EASEMENT DETAILS AND TABLES.
4. THE ACTUAL LIMITS OF THE UTILITY EASEMENTS WITHIN THE AREAS ON THIS ON THIS PLAN NOTED AS "COMBINED UTILITY AND ACCESS EASEMENTS" ARE SPECIFICALLY SET FORTH IN THE GRANTS OF THOSE EASEMENTS TO THE INDIVIDUAL UTILITY PROVIDER, WHICH GRANTS ARE BEING RECORDED SEPARATE FROM THIS PLAN.

Sheet Number: 20 of 64
Project Number: 15-100-31
Date: APRIL 12, 2022

ARCONA NEIGHBORHOOD 8.2

Lower Allen Township - Cumberland County, PA

CHARTER Homes & Neighborhoods

EASEMENT PLAN - OVERALL

Drafting: D TURNER
Checked by: -
Project Manager: DAVID B. KEGERIZE PE
Project Engineer: G. MITCHELL KING PE, PLS
Project Surveyor: MATTHEW A. WAYMAN PLS
Scale: 1"=50'
0 25 50 100 150

Seal: COMMONWEALTH OF PENNSYLVANIA REGISTERED PROFESSIONAL G. MITCHELL KING No. 044304-E 10/13/22

TOWNE SQUARE ENGINEERING
313 W. Liberty St., Suite 241
Lancaster, PA 17603
Phone: (717) 283-4538
Civil Engineers & Land Planners

DATE	REVISIONS
10/4/22	REV. FOR NEW CHAN HOMESITES
8/29/22	REV. PER TWP. AND CHAN COMMENTS
8/11/22	REV. PER BUCKEYE EMAIL DATED AUGUST 5, 2022
7/27/22	REV. PER BUCKEYE AND TWP. COMMENTS
6/20/22	ADDRESSED LATWP ZONING COMMENTS
6/9/22	REV. PER LATWP LETTER DATED MAY 16, 2022
6/2/22	ADDED POTHOLE DATA

Section Number: EA-2

10/13/2022 10:15 AM L:\15-100-31\SHEETS\PRELIMINARY-FINAL\26 EA-08.DWG

PRELIMINARY / FINAL

ARCONA PHASE 8.2 EASEMENT LEGEND

- EXISTING STORMWATER MANAGEMENT / DRAINAGE EASEMENT
- PROPOSED STORMWATER MANAGEMENT / DRAINAGE EASEMENT
- EXISTING SANITARY SEWER EASEMENT
- PROPOSED SANITARY SEWER EASEMENT
- PROPOSED WATERLINE EASEMENT
- EXISTING COMBINED UTILITY AND ACCESS EASEMENT
- PROPOSED COMBINED UTILITY AND ACCESS EASEMENT
- EXISTING SNOW EASEMENT
- PROPOSED SNOW EASEMENT
- PROPOSED CONSERVATION EASEMENT
- PROPOSED RIPARIAN EASEMENT
- EXISTING EASEMENTS (OTHER)
- EASEMENTS TO BE EXTINGUISHED

(N-1) BUCKEYE 24-INCH HIGH PRESSURE PETROLEUM PRODUCTS PIPELINE EASEMENT DESCRIBED IN MISC. BOK 127, PAGE 115
THE WIDTH OF PIPELINE EASEMENT IS NOT DEFINED IN THE INSTRUMENTS GRANTING SUCH EASEMENT. ALTHOUGH NOT SPECIFICALLY REQUIRED IN THE INSTRUMENT GRANTING SUCH EASEMENT, IT IS PRUDENT TO CONTACT THE HOLDER OF THE PIPELINE EASEMENT BEFORE PERFORMING WORK WITHIN 25 FEET OF THE PIPELINE.

(N-2) UGI ENERGY SERVICES INC., FORMERLY NISOURCE MIDSTREAM SERVICE, LLC EASEMENT DESCRIBED IN MISC. BOOK 81, PAGE 561
THE WIDTH OF PIPELINE EASEMENT IS NOT DEFINED IN THE INSTRUMENT GRANTING SUCH EASEMENT. ALTHOUGH NOT SPECIFICALLY REQUIRED IN THE INSTRUMENT GRANTING SUCH EASEMENT, IT IS PRUDENT TO CONTACT THE HOLDER OF THE PIPELINE EASEMENT BEFORE PERFORMING WORK WITHIN 25 FEET OF THE PIPELINE.

NOTES:

1. EXISTING UTILITY AND UNDERGROUND PIPELINE EASEMENTS ARE SHOWN ON THE EA SHEETS.
2. SEE EA-1 THRU EA-2 FOR ALL PROPOSED EASEMENTS AND EXISTING EASEMENTS TO BE EXTINGUISHED, RELOCATED OR ENLARGED).
3. SEE EA-3 THRU EA-8 FOR EASEMENT DETAILS AND TABLES.
4. THE ACTUAL LIMITS OF THE UTILITY EASEMENTS WITHIN THE AREAS ON THIS ON THIS PLAN NOTED AS "COMBINED UTILITY AND ACCESS EASEMENTS" ARE SPECIFICALLY SET FORTH IN THE GRANTS OF THOSE EASEMENTS TO THE INDIVIDUAL UTILITY PROVIDER, WHICH GRANTS ARE BEING RECORDED SEPARATE FROM THIS PLAN.

Sheet Number: 21 of 64
Project Number: 15-100-31
Date: APRIL 12, 2022

ARCONA NEIGHBORHOOD 8.2

Lower Allen Township - Cumberland County, PA

CHARTER Homes & Neighborhoods

EASEMENT PLAN - STORM DRAINAGE AND COMBINED ACCESS & UTILITY EASEMENTS

Drafting: D TURNER
Checked by: –
Scale: 1"=50'
Project Manager: DAVID B. KEGERIZE PE
Project Engineer: G. MITCHELL KING PE, PLS
Project Surveyor: MATTHEW A. WAYMAN PLS

Seal: COMMONWEALTH OF PENNSYLVANIA REGISTERED PROFESSIONAL ENGINEER G. MITCHELL KING 10/04/22

TOWNE SQUARE ENGINEERING
313 W. Liberty St., Suite 241
Lancaster, PA 17603
Phone: (717) 283-4538
Civil Engineers & Land Planners

DATE	REVISIONS
10/4/22	REV. FOR NEW CHMN HOMESITES
8/29/22	REV. PER TWP. AND CH&N COMMENTS
8/11/22	REV. PER BUCKEYE EMAIL DATED AUGUST 5, 2022
7/27/22	REV. PER BUCKEYE AND TWP. COMMENTS
6/20/22	ADDRESSED LATWP ZONING COMMENTS
6/9/22	REV. PER LATWP LETTER DATED MAY 16, 2022
6/2/22	ADDED POTHOLE DATA

Section Number: EA-3

10/13/2022 10:11 AM L:\15-100-31\SHEETS\PRELIMINARY-FINAL\26 EA-08.DWG

PRELIMINARY / FINAL

ARCONA PHASE 8.2
EASEMENT LEGEND

- EXISTING STORMWATER MANAGEMENT / DRAINAGE EASEMENT
- PROPOSED STORMWATER MANAGEMENT / DRAINAGE EASEMENT
- EXISTING SANITARY SEWER EASEMENT
- PROPOSED SANITARY SEWER EASEMENT
- PROPOSED WATERLINE EASEMENT
- EXISTING COMBINED UTILITY AND ACCESS EASEMENT
- PROPOSED COMBINED UTILITY AND ACCESS EASEMENT
- EXISTING SNOW EASEMENT
- PROPOSED SNOW EASEMENT
- PROPOSED CONSERVATION EASEMENT
- PROPOSED RIPARIAN EASEMENT
- EXISTING EASEMENTS (OTHER)
- EASEMENTS TO BE EXTINGUISHED

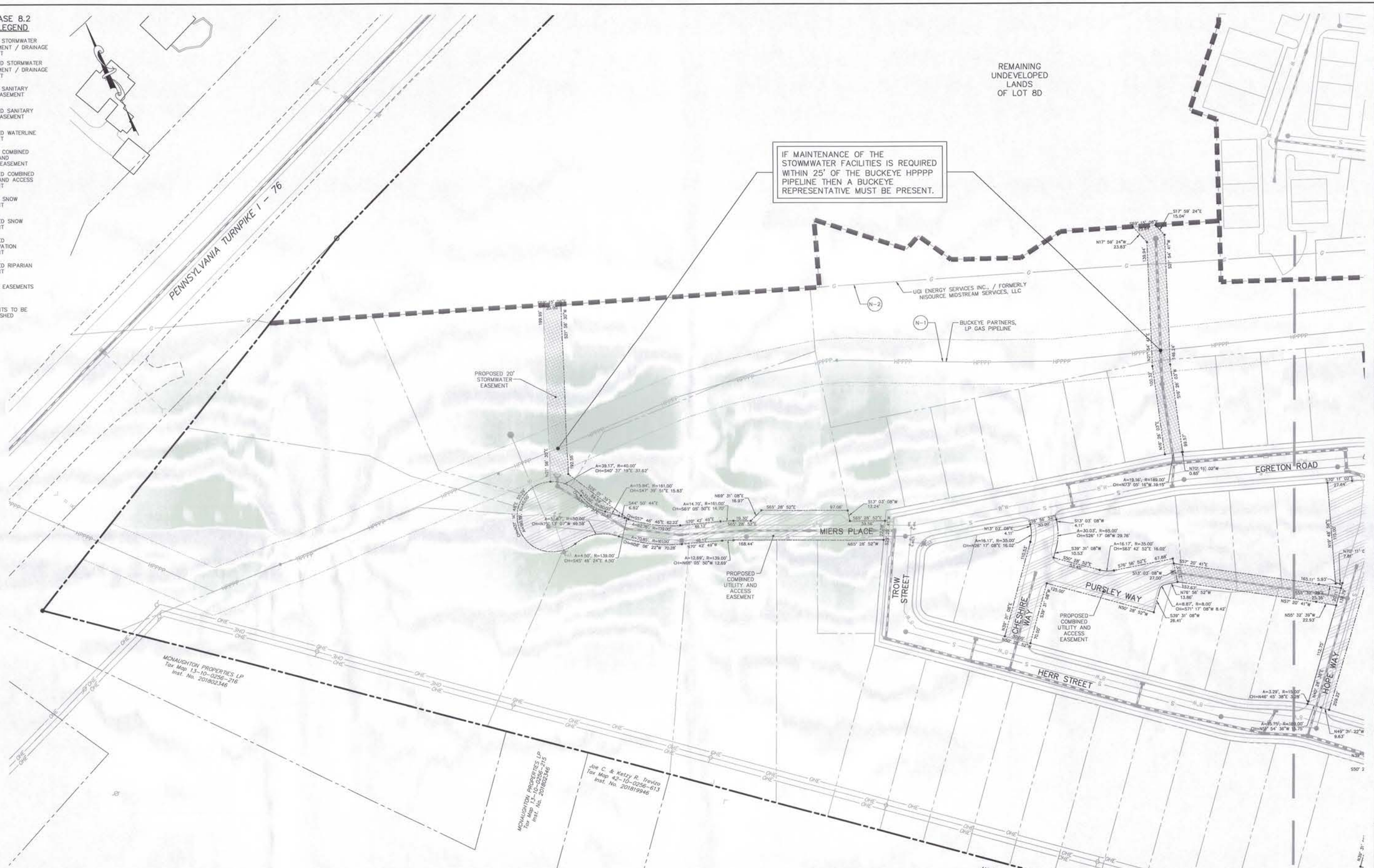

(N-1) BUCKEYE 24-INCH HIGH PRESSURE PETROLEUM PRODUCTS PIPELINE EASEMENT DESCRIBED IN MISC. BOK 127, PAGE 115
THE WIDTH OF PIPELINE EASEMENT IS NOT DEFINED IN THE INSTRUMENTS GRANTING SUCH EASEMENT. ALTHOUGH NOT SPECIFICALLY REQUIRED IN THE INSTRUMENT GRANTING SUCH EASEMENT, IT IS PRUDENT TO CONTACT THE HOLDER OF THE PIPELINE EASEMENT BEFORE PERFORMING WORK WITHIN 25 FEET OF THE PIPELINE.

(N-2) UGI ENERGY SERVICES INC., FORMERLY NISOURCE MIDSTREAM SERVICE, LLC EASEMENT DESCRIBED IN MISC. BOOK 81, PAGE 561
THE WIDTH OF PIPELINE EASEMENT IS NOT DEFINED IN THE INSTRUMENT GRANTING SUCH EASEMENT. ALTHOUGH NOT SPECIFICALLY REQUIRED IN THE INSTRUMENT GRANTING SUCH EASEMENT, IT IS PRUDENT TO CONTACT THE HOLDER OF THE PIPELINE EASEMENT BEFORE PERFORMING WORK WITHIN 25 FEET OF THE PIPELINE.

NOTES:

1. EXISTING UTILITY AND UNDERGROUND PIPELINE EASEMENTS ARE SHOWN ON THE EA SHEETS.
2. SEE EA-1 THRU EA-2 FOR ALL PROPOSED EASEMENTS AND EXISTING EASEMENTS TO BE EXTINGUISHED.
3. SEE EA-3 THRU EA-8 FOR EASEMENT DETAILS AND TABLES.
4. THE ACTUAL LIMITS OF THE UTILITY EASEMENTS WITHIN THE AREAS ON THIS ON THIS PLAN NOTED AS "COMBINED UTILITY AND ACCESS EASEMENTS" ARE SPECIFICALLY SET FORTH IN THE GRANTS OF THOSE EASEMENTS TO THE INDIVIDUAL UTILITY PROVIDER, WHICH GRANTS ARE BEING RECORDED SEPARATE FROM THIS PLAN.

Sheet Number: 22 of 64
Project Number: 15-100-31
Date: APRIL 12, 2022

ARCONA NEIGHBORHOOD 8.2

Lower Allen Township - Cumberland County, PA
CHARTER Homes & Neighborhoods

EASEMENT PLAN - STORM DRAINAGE AND COMBINED ACCESS & UTILITY EASEMENTS

Drafting: D TURNER
Checked by: -
Project Manager: DAVID B. KEGERIZE PE
Project Engineer: G. MITCHELL KING PE, PLS
Project Surveyor: MATTHEW A. WAYMAN PLS
Scale: 1"=50'
0 25 50 100 150

Seal: COMMONWEALTH OF PENNSYLVANIA REGISTERED PROFESSIONAL LAND SURVEYOR G. MITCHELL KING No. SU050648 10/13/22

TOWNE SQUARE ENGINEERING
313 W. Liberty St., Suite 241
Lancaster, PA 17603
Phone: (717) 283-4538
Civil Engineers & Land Planners

DATE	REVISIONS
10/4/22	REV. FOR NEW CH&N HOMESITES
8/29/22	REV. PER TWP. AND CH&N COMMENTS
8/11/22	REV. PER BUCKEYE EMAIL DATED AUGUST 5, 2022
7/27/22	REV. PER BUCKEYE AND TWP. COMMENTS
6/20/22	ADDRESSED LATWP ZONING COMMENTS
6/9/22	REV. PER LATWP LETTER DATED MAY 16, 2022
6/2/22	ADDED POTHOLE DATA

Section Number: EA-4

10/13/2022 10:07 AM L:\15-100-31\SHEETS\PRELIMINARY-FINAL\26 EA-08.DWG

PRELIMINARY / FINAL

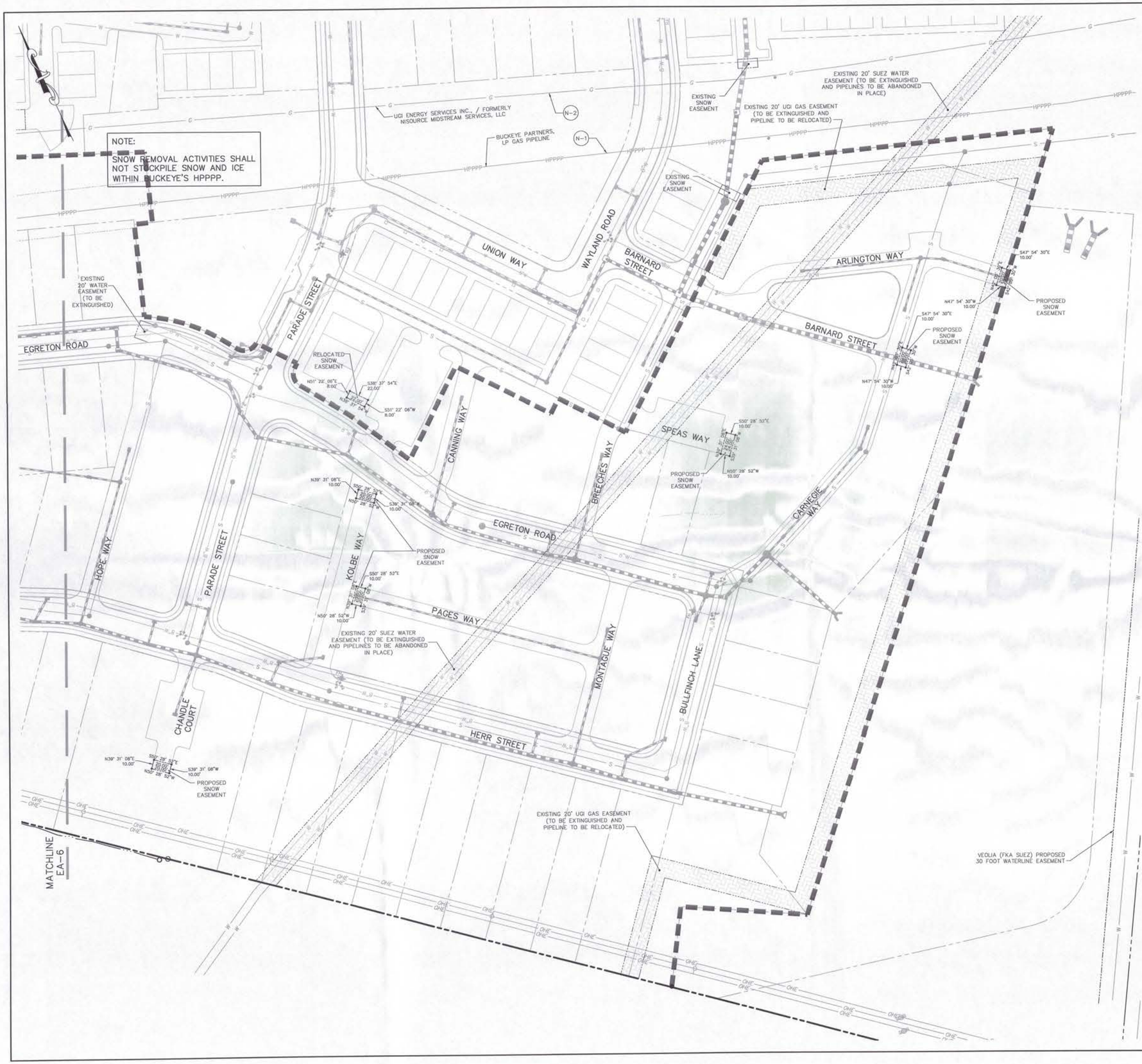

ARCONA PHASE 8.2 EASEMENT LEGEND

- EXISTING STORMWATER MANAGEMENT / DRAINAGE EASEMENT
- PROPOSED STORMWATER MANAGEMENT / DRAINAGE EASEMENT
- EXISTING SANITARY SEWER EASEMENT
- PROPOSED SANITARY SEWER EASEMENT
- PROPOSED WATERLINE EASEMENT
- EXISTING COMBINED UTILITY AND ACCESS EASEMENT
- PROPOSED COMBINED UTILITY AND ACCESS EASEMENT
- EXISTING SNOW EASEMENT
- PROPOSED SNOW EASEMENT
- PROPOSED CONSERVATION EASEMENT
- PROPOSED RIPARIAN EASEMENT
- EXISTING EASEMENTS (OTHER)
- EASEMENTS TO BE EXTINGUISHED

(N-1) BUCKEYE 24-INCH HIGH PRESSURE PETROLEUM PRODUCTS PIPELINE EASEMENT DESCRIBED IN MISC. BOK 127, PAGE 115
THE WIDTH OF PIPELINE EASEMENT IS NOT DEFINED IN THE INSTRUMENTS GRANTING SUCH EASEMENT. ALTHOUGH NOT SPECIFICALLY REQUIRED IN THE INSTRUMENT GRANTING SUCH EASEMENT, IT IS PRUDENT TO CONTACT THE HOLDER OF THE PIPELINE EASEMENT BEFORE PERFORMING WORK WITHIN 25 FEET OF THE PIPELINE.

(N-2) UGI ENERGY SERVICES INC., FORMERLY NISOURCE MIDSTREAM SERVICE, LLC EASEMENT DESCRIBED IN MISC. BOOK 81, PAGE 561
THE WIDTH OF PIPELINE EASEMENT IS NOT DEFINED IN THE INSTRUMENT GRANTING SUCH EASEMENT. ALTHOUGH NOT SPECIFICALLY REQUIRED IN THE INSTRUMENT GRANTING SUCH EASEMENT, IT IS PRUDENT TO CONTACT THE HOLDER OF THE PIPELINE EASEMENT BEFORE PERFORMING WORK WITHIN 25 FEET OF THE PIPELINE.

NOTES:

1. EXISTING UTILITY AND UNDERGROUND PIPELINE EASEMENTS ARE SHOWN ON THE EA SHEETS.
2. SEE EA-1 THRU EA-2 FOR ALL PROPOSED EASEMENTS AND EXISTING EASEMENTS TO BE EXTINGUISHED.
3. SEE EA-3 THRU EA-8 FOR EASEMENT DETAILS AND TABLES.
4. THE ACTUAL LIMITS OF THE UTILITY EASEMENTS WITHIN THE AREAS ON THIS ON THIS PLAN NOTED AS "COMBINED UTILITY AND ACCESS EASEMENTS" ARE SPECIFICALLY SET FORTH IN THE GRANTS OF THOSE EASEMENTS TO THE INDIVIDUAL UTILITY PROVIDER, WHICH GRANTS ARE BEING RECORDED SEPARATE FROM THIS PLAN.

Sheet Number: 23 of 64
Project Number: 15-100-31
Date: APRIL 12, 2022

ARCONA NEIGHBORHOOD 8.2

Lower Allen Township - Cumberland County, PA
CHARTER Homes & Neighborhoods

EASEMENT PLAN - WATER, SNOW & CONSERVATION EASEMENTS

Drafting: D TURNER
Checked by: -
Scale: 1"=50'
0 25 50 100 150

Project Manager: DAVID B. KEGERIZE PE
Project Engineer: G. MITCHELL KING PE, PLS
Project Surveyor: MATTHEW A. WAYMAN PLS

Seal: COMMONWEALTH OF PENNSYLVANIA REGISTERED PROFESSIONAL ENGINEER G. MITCHELL KING 10/13/22

TOWNE SQUARE ENGINEERING
313 W. Liberty St., Suite 241
Lancaster, PA 17603
Phone: (717) 283-4538
Civil Engineers & Land Planners

DATE	REVISIONS
10/4/22	REV. FOR NEW CH&H HOMESITES
8/29/22	REV. PER TWP. AND CH&H COMMENTS
8/11/22	REV. PER BUCKEYE EMAIL DATED AUGUST 5, 2022
7/27/22	REV. PER BUCKEYE AND TWP. COMMENTS
6/20/22	ADDRESSED LATWP ZONING COMMENTS
6/9/22	REV. PER LATWP LETTER DATED MAY 16, 2022
6/2/22	ADDED POTHOLE DATA

Section Number: EA-5

10/13/2022 10:05 AM L:\15-100-31\SHEETS\PRELIMINARY-FINAL\28 EA-08.DWG

PRELIMINARY / FINAL

ARCONA PHASE 8.2
EASEMENT LEGEND

- EXISTING STORMWATER MANAGEMENT / DRAINAGE EASEMENT
- PROPOSED STORMWATER MANAGEMENT / DRAINAGE EASEMENT
- EXISTING SANITARY SEWER EASEMENT
- PROPOSED SANITARY SEWER EASEMENT
- PROPOSED WATERLINE EASEMENT
- EXISTING COMBINED UTILITY AND ACCESS EASEMENT
- PROPOSED COMBINED UTILITY AND ACCESS EASEMENT
- EXISTING SNOW EASEMENT
- PROPOSED SNOW EASEMENT
- PROPOSED CONSERVATION EASEMENT
- PROPOSED RIPARIAN EASEMENT
- EXISTING EASEMENTS (OTHER)
- EASEMENTS TO BE EXTINGUISHED

NOTE:

SNOW REMOVAL ACTIVITIES SHALL NOT STOCKPILE SNOW AND ICE WITHIN BUCKEYE'S HPPPP.

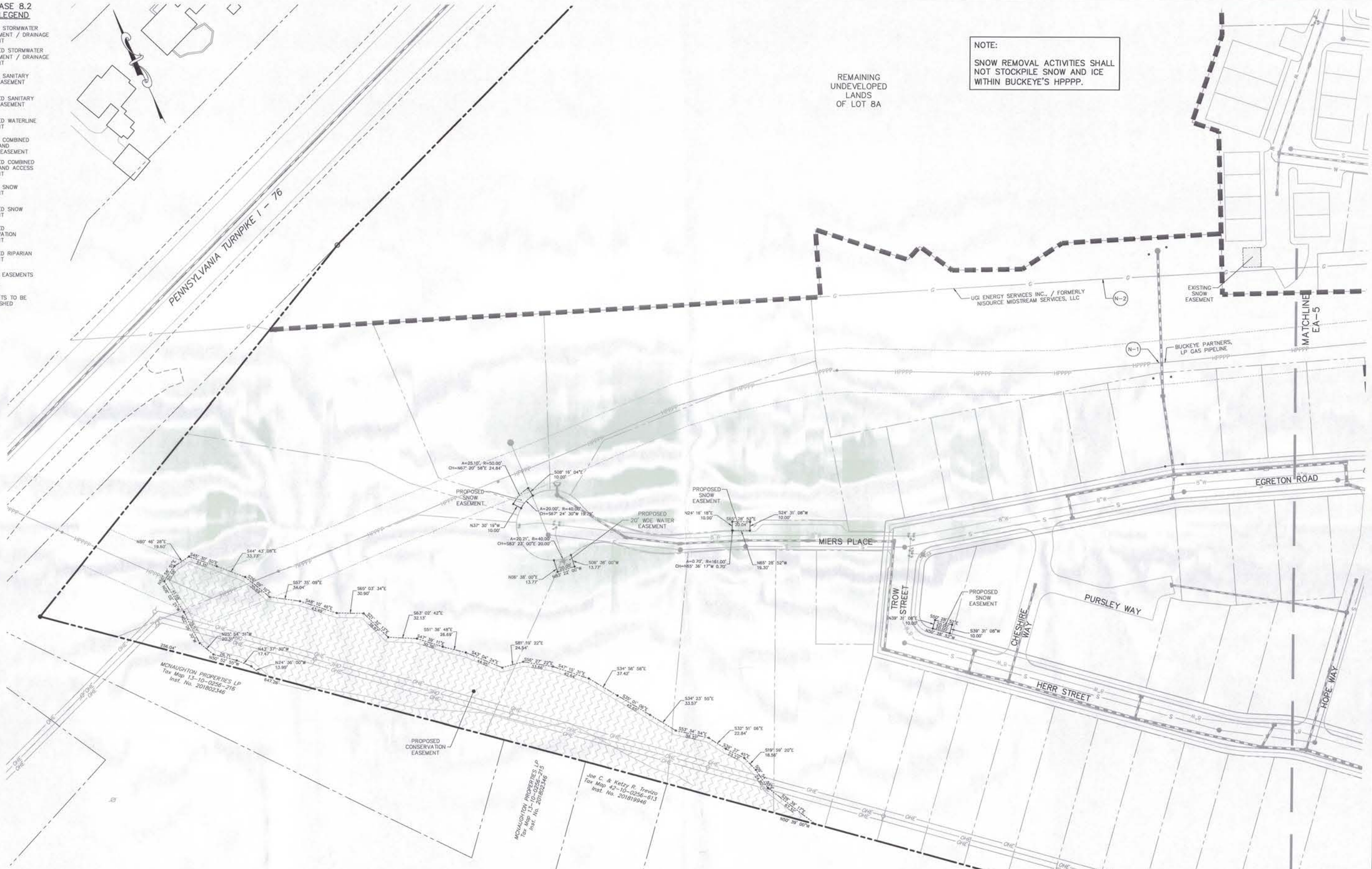

(N-1) BUCKEYE 24-INCH HIGH PRESSURE PETROLEUM PRODUCTS PIPELINE EASEMENT DESCRIBED IN MISC. BOK 127, PAGE 115
THE WIDTH OF PIPELINE EASEMENT IS NOT DEFINED IN THE INSTRUMENTS GRANTING SUCH EASEMENT, ALTHOUGH NOT SPECIFICALLY REQUIRED IN THE INSTRUMENT GRANTING SUCH EASEMENT, IT IS PRUDENT TO CONTACT THE HOLDER OF THE PIPELINE EASEMENT BEFORE PERFORMING WORK WITHIN 25 FEET OF THE PIPELINE.

(N-2) UGI ENERGY SERVICES INC., FORMERLY NISOURCE MIDSTREAM SERVICE, LLC EASEMENT DESCRIBED IN MISC. BOOK 81, PAGE 561
THE WIDTH OF PIPELINE EASEMENT IS NOT DEFINED IN THE INSTRUMENT GRANTING SUCH EASEMENT, ALTHOUGH NOT SPECIFICALLY REQUIRED IN THE INSTRUMENT GRANTING SUCH EASEMENT, IT IS PRUDENT TO CONTACT THE HOLDER OF THE PIPELINE EASEMENT BEFORE PERFORMING WORK WITHIN 25 FEET OF THE PIPELINE.

NOTES:

1. EXISTING UTILITY AND UNDERGROUND PIPELINE EASEMENTS ARE SHOWN ON THE EA SHEETS.
2. SEE EA-1 THRU EA-2 FOR ALL PROPOSED EASEMENTS AND EXISTING EASEMENTS TO BE EXTINGUISHED.
3. SEE EA-3 THRU EA-8 FOR EASEMENT DETAILS AND TABLES.
4. THE ACTUAL LIMITS OF THE UTILITY EASEMENTS WITHIN THE AREAS ON THIS ON THIS PLAN NOTED AS "COMBINED UTILITY AND ACCESS EASEMENTS" ARE SPECIFICALLY SET FORTH IN THE GRANTS OF THOSE EASEMENTS TO THE INDIVIDUAL UTILITY PROVIDER, WHICH GRANTS ARE BEING RECORDED SEPARATE FROM THIS PLAN.

Sheet Number: 24 of 64
Project Number: 15-100-31
Date: APRIL 12, 2022

ARCONA NEIGHBORHOOD 8.2

Lower Allen Township - Cumberland County, PA
CHARTER Homes & Neighborhoods

EASEMENT PLAN - WATER, SNOW & CONSERVATION EASEMENTS

Drafting: D TURNER
Checked by: -
Scale: 1"=50'
0 25 50 100 150

Project Manager: DAVID B. KEGERIZE PE
Project Engineer: G. MITCHELL KING PE, PLS
Project Surveyor: MATTHEW A. WAYMAN PLS

Seal: COMMONWEALTH OF PENNSYLVANIA REGISTERED PROFESSIONAL G. MITCHELL KING 047-E 12/13/21

TOWNE SQUARE ENGINEERING
313 W. Liberty St., Suite 241
Lancaster, PA 17603
Phone: (717) 283-4538
Civil Engineers & Land Planners

DATE	REVISIONS
10/4/22	REV. FOR NEW CH&H HOMESITES
8/29/22	REV. PER TWP. AND CH&H COMMENTS
8/11/22	REV. PER BUCKEYE EMAIL DATED AUGUST 5, 2022
7/27/22	REV. PER BUCKEYE AND TWP. COMMENTS
6/20/22	ADDRESSED LATWP ZONING COMMENTS
6/9/22	REV. PER LATWP LETTER DATED MAY 16, 2022
6/2/22	ADDED POTHOLE DATA

Section Number: EA-6

PRELIMINARY / FINAL

10/13/2022 10:15 AM L:\15-100-31\SHEETS\PRELIMINARY-FINAL\26 EA-08.DWG

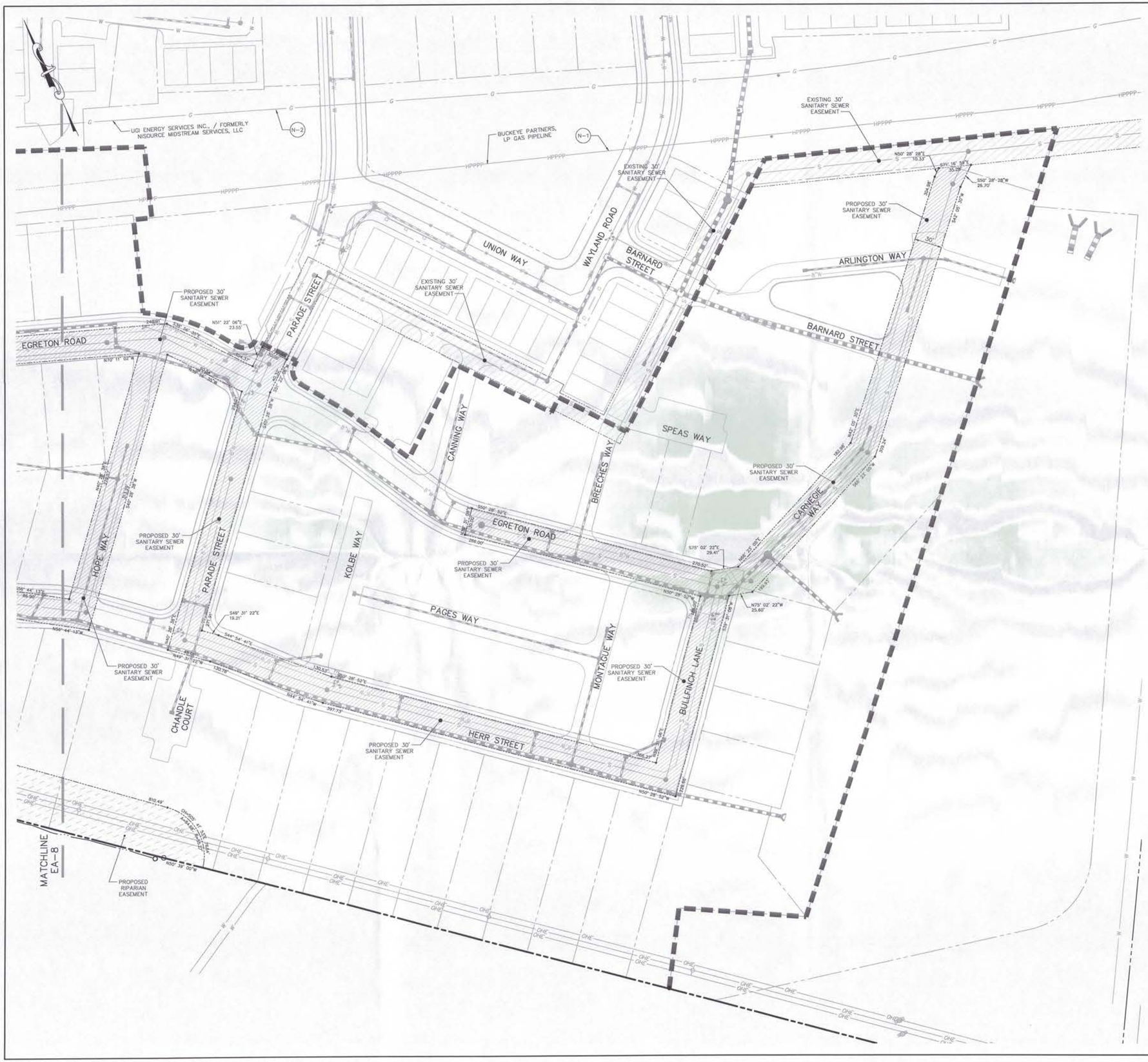

(N-1) BUCKEYE 24-INCH HIGH PRESSURE PETROLEUM PRODUCTS PIPELINE EASEMENT DESCRIBED IN MISC. BOK 127, PAGE 115
THE WIDTH OF PIPELINE EASEMENT IS NOT DEFINED IN THE INSTRUMENTS GRANTING SUCH EASEMENT. ALTHOUGH NOT SPECIFICALLY REQUIRED IN THE INSTRUMENT GRANTING SUCH EASEMENT, IT IS PRUDENT TO CONTACT THE HOLDER OF THE PIPELINE EASEMENT BEFORE PERFORMING WORK WITHIN 25 FEET OF THE PIPELINE.

(N-2) UGI ENERGY SERVICES INC., FORMERLY NISOURCE MIDSTREAM SERVICE, LLC EASEMENT DESCRIBED IN MISC. BOOK 81, PAGE 561
THE WIDTH OF PIPELINE EASEMENT IS NOT DEFINED IN THE INSTRUMENT GRANTING SUCH EASEMENT. ALTHOUGH NOT SPECIFICALLY REQUIRED IN THE INSTRUMENT GRANTING SUCH EASEMENT, IT IS PRUDENT TO CONTACT THE HOLDER OF THE PIPELINE EASEMENT BEFORE PERFORMING WORK WITHIN 25 FEET OF THE PIPELINE.

ARCONA PHASE 8.2
EASEMENT LEGEND

- EXISTING STORMWATER MANAGEMENT / DRAINAGE EASEMENT
- PROPOSED STORMWATER MANAGEMENT / DRAINAGE EASEMENT
- EXISTING SANITARY SEWER EASEMENT
- PROPOSED SANITARY SEWER EASEMENT
- PROPOSED WATERLINE EASEMENT
- EXISTING COMBINED UTILITY AND ACCESS EASEMENT
- PROPOSED COMBINED UTILITY AND ACCESS EASEMENT
- EXISTING SNOW EASEMENT
- PROPOSED SNOW EASEMENT
- PROPOSED CONSERVATION EASEMENT
- PROPOSED RIPARIAN EASEMENT
- EXISTING EASEMENTS (OTHER)
- EASEMENTS TO BE EXTINGUISHED

NOTES:

1. EXISTING UTILITY AND UNDERGROUND PIPELINE EASEMENTS ARE SHOWN ON THE EA SHEETS.
2. SEE EA-1 THRU EA-2 FOR ALL PROPOSED EASEMENTS AND EXISTING EASEMENTS TO BE EXTINGUISHED.
3. SEE EA-3 THRU EA-8 FOR EASEMENT DETAILS AND TABLES.
4. THE ACTUAL LIMITS OF THE UTILITY EASEMENTS WITHIN THE AREAS ON THIS ON THIS PLAN NOTED AS "COMBINED UTILITY AND ACCESS EASEMENTS" ARE SPECIFICALLY SET FORTH IN THE GRANTS OF THOSE EASEMENTS TO THE INDIVIDUAL UTILITY PROVIDER, WHICH GRANTS ARE BEING RECORDED SEPARATE FROM THIS PLAN.

Sheet Number: 25 of 64
Project Number: 15-100-31
Date: APRIL 12, 2022

ARCONA NEIGHBORHOOD 8.2

Lower Allen Township - Cumberland County, PA

CHARTER Homes & Neighborhoods

EASEMENT PLAN - SANITARY SEWER & RIPARIAN EASEMENTS

Project Manager: DAVID B. KEGERIZE PE
Drafting: D TURNER
Project Engineer: G. MITCHELL KING PE, PLS
Checked by: -
Project Surveyor: MATTHEW A. WAYMAN PLS
Scale: 1"=50'
0 25 50 100 150

Seal: COMMONWEALTH OF PENNSYLVANIA REGISTERED PROFESSIONAL LICENSE No. 044800 G. MITCHELL KING 10/13/22

TOWNE SQUARE ENGINEERING
313 W. Liberty St., Suite 241
Lancaster, PA 17603
Phone: (717) 283-4538
Civil Engineers & Land Planners

DATE	REVISIONS
10/4/22	REV. FOR NEW CH&H HOMESITES
8/29/22	REV. PER TWP. AND CH&H COMMENTS
8/11/22	REV. PER BUCKEYE EMAIL DATED AUGUST 5, 2022
7/27/22	REV. PER BUCKEYE AND TWP. COMMENTS
6/20/22	ADDRESSED LATWP ZONING COMMENTS
6/9/22	REV. PER LATWP LETTER DATED MAY 16, 2022
6/2/22	ADDED POTHOLE DATA

Section Number: EA-7

10/13/2022 10:07 AM L:\15-100-31\SHEETS\PRELIMINARY-FINAL\20 EA-08.DWG

PRELIMINARY / FINAL

ARCONA PHASE 8.2
EASEMENT LEGEND

- EXISTING STORMWATER MANAGEMENT / DRAINAGE EASEMENT
- PROPOSED STORMWATER MANAGEMENT / DRAINAGE EASEMENT
- EXISTING SANITARY SEWER EASEMENT
- PROPOSED SANITARY SEWER EASEMENT
- PROPOSED WATERLINE EASEMENT
- EXISTING COMBINED UTILITY AND ACCESS EASEMENT
- PROPOSED COMBINED UTILITY AND ACCESS EASEMENT
- EXISTING SNOW EASEMENT
- PROPOSED SNOW EASEMENT
- PROPOSED CONSERVATION EASEMENT
- PROPOSED RIPARIAN EASEMENT
- EXISTING EASEMENTS (OTHER)
- EASEMENTS TO BE EXTINGUISHED

(N-1) BUCKEYE 24-INCH HIGH PRESSURE PETROLEUM PRODUCTS PIPELINE EASEMENT DESCRIBED IN MISC. BOK 127, PAGE 115
THE WIDTH OF PIPELINE EASEMENT IS NOT DEFINED IN THE INSTRUMENTS GRANTING SUCH EASEMENT. ALTHOUGH NOT SPECIFICALLY REQUIRED IN THE INSTRUMENT GRANTING SUCH EASEMENT, IT IS PRUDENT TO CONTACT THE HOLDER OF THE PIPELINE EASEMENT BEFORE PERFORMING WORK WITHIN 25 FEET OF THE PIPELINE.

(N-2) UGI ENERGY SERVICES INC., FORMERLY NISOURCE MIDSTREAM SERVICE, LLC EASEMENT DESCRIBED IN MISC. BOOK 81, PAGE 561
THE WIDTH OF PIPELINE EASEMENT IS NOT DEFINED IN THE INSTRUMENT GRANTING SUCH EASEMENT. ALTHOUGH NOT SPECIFICALLY REQUIRED IN THE INSTRUMENT GRANTING SUCH EASEMENT, IT IS PRUDENT TO CONTACT THE HOLDER OF THE PIPELINE EASEMENT BEFORE PERFORMING WORK WITHIN 25 FEET OF THE PIPELINE.

NOTES:

1. EXISTING UTILITY AND UNDERGROUND PIPELINE EASEMENTS ARE SHOWN ON THE EA SHEETS.
2. SEE EA-1 THRU EA-2 FOR ALL PROPOSED EASEMENTS AND EXISTING EASEMENTS TO BE EXTINGUISHED.
3. SEE EA-3 THRU EA-8 FOR EASEMENT DETAILS AND TABLES.
4. THE ACTUAL LIMITS OF THE UTILITY EASEMENTS WITHIN THE AREAS ON THIS ON THIS PLAN NOTED AS "COMBINED UTILITY AND ACCESS EASEMENTS" ARE SPECIFICALLY SET FORTH IN THE GRANTS OF THOSE EASEMENTS TO THE INDIVIDUAL UTILITY PROVIDER, WHICH GRANTS ARE BEING RECORDED SEPARATE FROM THIS PLAN.

Sheet Number: 26 of 64
Project Number: 15-100-31
Date: APRIL 12, 2022

ARCONA NEIGHBORHOOD 8.2

Lower Allen Township - Cumberland County, PA
CHARTER Homes & Neighborhoods.

EASEMENT PLAN - SANITARY SEWER & RIPARIAN EASEMENTS

Drafting: D TURNER
Checked by: -
Scale: 1"=50'
0 25 50 100 150

Project Manager: DAVID B. KEGERIZE PE
Project Engineer: G. MITCHELL KING PE, PLS
Project Surveyor: MATTHEW A. WAYMAN PLS

Seal: COMMONWEALTH OF PENNSYLVANIA REGISTERED PROFESSIONAL ENGINEER G. MITCHELL KING 044067-E 10/6/22

TOWNE SQUARE ENGINEERING
313 W. Liberty St., Suite 241
Lancaster, PA 17603
Phone: (717) 283-4538
Civil Engineers & Land Planners

DATE	REVISIONS
10/4/22	REV. FOR NEW CH&N HOMESITES
8/29/22	REV. PER TWP. AND CH&N COMMENTS
8/11/22	REV. PER BUCKEYE EMAIL DATED AUGUST 5, 2022
7/27/22	REV. PER BUCKETE AND TWP. COMMENTS
6/20/22	ADDRESSED LATWP ZONING COMMENTS
6/9/22	REV. PER LATWP LETTER DATED MAY 16, 2022
6/2/22	ADDED POTHOLE DATA.

Section Number: EA-8

10/13/2022 10:11 AM L:\15-100-31\SHEETS\PRELIMINARY-FINAL\26 EA-08.DWG

PRELIMINARY / FINAL

POST CONSTRUCTION STORMWATER MANAGEMENT PLAN

ARCONA NEIGHBORHOOD 8.2

Post Construction Storm Water BMP Operation & Maintenance Procedures

Inspections detailed below shall employ a qualified a registered professional to conduct the inspections and prepare reports. The entity conducting the inspection shall be required to submit a report to the Municipality annually. Reports shall be submitted by February 1 for inspections completed the previous year. The report shall document the condition of the facilities and recommend needed repairs. Recommended repairs and other corrective actions shall be implemented by the Arcona Neighborhood 8 Association, Inc. within thirty days of the report date.

Detention Basin

The general objective of maintenance is to prevent clogging of the outlets and to prevent the growth of weeds and trees. The basin berm and side should be maintained as upland meadow turf grass. The grass should be mowed regularly to maintain a grass height of 6–8 inches. Any seedlings or plantings should be removed from the basin. Root voids and burrows should be filled with soil similar to the surrounding materials. Plug the burrows with stone or concrete just below the surface. If plugging burrows does not discourage the animal population, take further measures to remove the animal population

Sediment tends to accumulate over time. The collected sediment in the bottom of the basin must be removed every five to ten years. Clean accumulated silt, sand, mud and debris. Remove from the site and dispose of in an appropriate approved facility. Seed and mulch the disturbed areas immediately.

The detention basin should be inspected quarterly and after every major storm. Inspections, operation, maintenance, and repairs to the basins are the responsibility of the Arcona Neighborhood 8 Association, Inc.

Constructed Wetlands

See Sheet SM–7.

Grass Swales

Grass swales shall be maintained with turf grass. The swales should be mowed regularly to maintain a grass height of 3 to 5 inches. Debris should be removed from the swales. If erosion occurs uphill of the swales, any sediment deposited in the swales should be removed. The eroded areas should be repaired and stabilized with seed and mulch. Apply seed & mulch to disturbed areas of the swales after sediment is removed. Grass swales shall be maintained by the Arcona Neighborhood 8 Association, Inc.

Rip Rap Pads

The outlet structures should be inspected quarterly and after each major storm. If the soil has eroded around or below the rip rap pad, the area should be repaired with top soil, seed and mulch.

GEOLOGIC EVALUATION:
by ARM Group, Inc.

SUMMARY

- According to the Pennsylvania Department of Conservation and Natural Resources online Geologic Data Exploration application (PaGEODE), the site in underlain by the Epler Formation, Hamburg sequence rocks, Hershey Formation and the Myerstown Formation. The Epler Formation consists of a very crystalline, medium–gray limestone interbedded with gray dolomite that is moderately weathered to a shallow depth. The Hamburg sequence rocks are transported rocks of the Hamburg overthrust; gray, greenish–gray and maroon shale, which are silty and siliceous in many areas; dark gray impure sandstone; medium to light–gray finely crystalline limestone and shaly limestone. The Hershey Formation consists of dark–gray to black, argillaceous limestone. The characterization of the Myerstown Formation is medium to dark–gray, medium–crystalline limestone with dark gray to black carbonaceous limestone at the base.
- Review of the Sinkholes and Karst–Related Features of Cumberland County, Pennsylvania, (W.E. Kochanov, 1989), there are multiple closed depressions mapped within common geologic formations within 2,000 feet of the site, but no sinkholes are mapped within the site boundary.
- The site reconnaissance and infiltration testing performed by ARM Group, Inc. personnel revealed no closed depressions, topographic lineaments or fracture traces, caverns, intermittent lakes, ephemeral streams, or other carbonate geology hazards.

RECOMMENDATIONS

- Based on the test results, the typical measured infiltration capacity of the site soils across the site ranged from approximately 0 (no measurable infiltration capacity over a period of more than 2.5 hours) to 2.2 in/hr; these consistent results suggest very low potential infiltration capacity across the site, and are consistent with the clayey soils encountered.
- Additionally, based on ARM's filed observations and other available information, concentrated stormwater infiltration is acceptable, but sinkhole avoidance and mitigation measures should be observed and incorporated into the design and construction of the project. Please refer to the "Design and Construction Recommendations" section of the ARM report.
- ARM has determined that the site is situated within a karst area, which is potentially subject to the development of sinkholes. As presented in the ARM Group, Inc. Report, Figure 1, at least a dozen closed depressions were previously mapped by Kochanov around the site, in the same geologic formations. While no existing sinkholes, closed depressions or other carbonate geology hazards were visually observed at the existing ground surface by ARM within the investigation area, and were not identified through a review of available aerial photographs and topographic maps, the soil and rock conditions encountered are considered to present a risk for sinkhole development. Concentrated stormwater infiltration would potentially increase the risk for sinkhole development at the site, stormwater management systems should be constructed using appropriate sinkhole mitigation and/or stabilization methods to minimize the potential for sinkhole development.

PLAN: 1" = 200'

This site is located on UNT to Cedar Run. Cedar Run is classified as Cold Water Fisheries (CWF).

Disturbed Area = 67.46 Ac.
Site Area = 73.09 Ac.

LOCATION MAP
SCALE: 1" = 2000'

PLAN INDEX		
NO.	SEC.	TITLE
39	SM–1	POST CONSTRUCTION STORMWATER MANAGEMENT PLAN – COVER
40	SM–2	POST CONSTRUCTION STORMWATER MANAGEMENT PLAN
41	SM–3	POST CONSTRUCTION STORMWATER MANAGEMENT PLAN
42	SM–4	POST CONSTRUCTION STORMWATER MANAGEMENT PLAN
43	SM–5	POST CONSTRUCTION STORMWATER MANAGEMENT PLAN
44	SM–6	POST CONSTRUCTION STORMWATER MANAGEMENT DETAILS
45	SM–7	POST CONSTRUCTION STORMWATER MANAGEMENT BASIN DETAILS
46	RD–1	ROOF DRAIN CONNECTION PLAN

EQUITABLE OWNER / DEVELOPER
(ARCONA NEIGHBORHOOD 8.2):
Charter Homes Development Company
322 North Arch Street
Lancaster, PA 17603

OWNER / DEVELOPER
(ARCONA NEIGHBORHOOD 8.1):
Charter Homes at Arcona Inc.
322 North Arch Street
Lancaster, PA 17603

SOURCE OF TITLE:
Tax Map 13–10–0256–232
Inst. No.: 202035221

OWNER (ARCONA NEIGHBORHOOD 8, LOT 8A)
Ruth D. Lesher
1340 Rossmoyne Road
Mechanicsburg, PA 17055

SOURCE OF TITLE:
Tax Map 13–10–0256–226
Inst. No.: 201729508 (1/2 interest)

OWNER (ARCONA NEIGHBORHOOD 8, LOT 8A)
Strong & Detweiler Partnership
1340 Rossmoyne Road
Mechanicsburg, PA 17055

SOURCE OF TITLE:
Tax Map 13–10–0256–226
Deed Book: 274, Page 1884 (1/2 interest)

OWNER (ARCONA NEIGHBORHOOD 8, LOT 8B)
Emerson L. & Ruth D. Lesher
1340 Rossmoyne Road
Mechanicsburg, PA 17055

SOURCE OF TITLE:
Tax Map 13–10–0256–032
Deed Book: 134, Page 114

OWNER (ARCONA NEIGHBORHOOD 8, LOT 8C)
Emerson L. & Ruth D. Lesher
1340 Rossmoyne Road
Mechanicsburg, PA 17055

SOURCE OF TITLE:
Tax Map 13–10–0256–009
Inst. No.: 201905003

OWNER (ARCONA NEIGHBORHOOD 8, LOT 8D)
Ruth D. Lesher
1340 Rossmoyne Road
Mechanicsburg, PA 17055

SOURCE OF TITLE:
Tax Map 13–10–0256–227
Deed Book: 184, Page 353

SITE DATA:

HIGHWAY OCCUPANCY PERMIT (PREPARED BY OTHERS) TO BE DETERMINED

ZONING:
R–2 Single–Family Residential
District (TND Overlay)

PROPOSED USE:

56 Single–Family Lots & 88 Single–Family Attached Units

PROPOSED WATER SERVICE:

PUBLIC

PROPOSED SEWER SERVICE:

PUBLIC

NOTES:

1. LEGEND IS LOCATED ON SM–3.

SITE ACREAGE:

ARCONA NEIGHBORHOOD LOT 8 – GROSS AREA	=	80.96 Ac.
LESS ROSSMOYNE ROAD & RAILROAD R/W		3.68 Ac.
ARCONA NEIGHBORHOOD LOT 8 – NET AREA		77.28 Ac.
ARCONA NEIGHBORHOOD 8.2 – GROSS AREA		31.09 Ac.

NPDES NARRATIVE

Charter Homes and Neighborhoods, Inc. proposes to develop 56 detached single–family lots and 88 attached single–family units in Arcona Neighborhood 8.2. The development is located on a 80.96 acre tract of land. The Arcona Neighborhood 8.2 property is located on the south side of Rossmoyne Road along the south side of the Pennsylvania Turnpike. The development will be served by public sewer and water. The land is currently farmed.

Arcona Neighborhood 8.2 is a part of the master plan for a traditional neighborhood development (TND) of the Arcona Site. Storm water management for the Arcona Neighborhood 8.2 development will be provided by a regional detention basin which will collect runoff.

ESTIMATED SCHEDULE FOR PROJECT

Work Schedule:

- Start of Site Work: September 2022.
- Site Work Complete: March 2023.
- Home Construction: Q4 2022 – Q4 2024.

RECYCLING AND DISPOSAL OF BUILDING MATERIALS AND WASTES

The operator shall remove from the site, recycle, or dispose of all building materials and wastes in accordance with the department's solid waste management regulations at 25 pa. Code 260.1 et seq., 271.1 et seq., and 287.1 et seq. The contractor shall not illegally bury, dump, or discharge any building material or wastes at the site

DESIGN CONSIDERATIONS

The time and extent of earth disturbance will be limited.

- The development of the project will be phased to limit the amount of earth disturbance in any one phase.
- Earth disturbance, topsoil stripping and compaction will be limited on portions of the site. These areas will be marked with orange construction fence as a visible reminder of the areas to be preserved.

The Arcona Neighborhood 8.2 plan protects existing drainage features and vegetation.

- The existing drainageway/wetlands that run through the site will be fenced to prevent disturbance.

The plans minimize soil compaction by:

- Leaving steep slopes undisturbed.

The plans minimize generation of increased stormwater runoff by:

- Use streets with the minimum width permitted by Lower Allen Township.

THERMAL IMPACTS

A portion of the Arcona Neighborhood 8.2 will drain into the regional detention basin via a stormwater management conveyance system. The basin will contain the warmer first flush runoff from the site. The warmer first flush will either be evaporated or transpirated through the constructed wetlands in the bottom of the basin. The subsequent, cooler runoff will be filtered and cooled by the 50–foot wooded/vegetated buffer along UNT of Cedar Run before it reaches the surface waters.

PCSM BMPs:

The following PCSM BMPs will maintain water flow rate, volume and water quality for Arcona Neighborhood 8.1 & 8.2:

- Rate and Volume Control in Basin 1, constructed as a part of Arcona Neighborhood 8.1. The basin will have a constructed wetlands in the bottom, which will improve water quality as well as provide volume control.
- No additional PCSM BMPs are proposed within the boundaries of Arcona Neighborhood 8.1 & 8.2. The facilities above will handle stormwater runoff, allowing the Arcona Neighborhood 8.1 & 8.2 site to meet CG–1 standards without on–phase PCSM BMPs.

PCSM NOTES:

1. The maintenance of all off–street storm water conveyance and management facilities shall be the responsibility of of the Neighborhood Association. Maintenance shall include, but not be limited to normal maintenance as well as repair of structural damage or deterioration of any kind, including that caused by sinkholes, erosions or other events.
2. The officials of Lower Allen Township shall have the right, but not the duty of access at any time to inspect and maintain the facilities at the property owner's expense, if the owner should fail to properly maintain the facilities.
3. All drainage structures (including inlets, storm manholes, endwalls, etc.) proposed for dedication or located within a street section shall be capable of handling an HS–25 loading. All storm sewer pipes, culverts, manholes, inlets, endwalls, and end sections shall be constructed in accordance with the specifications set forth in the Pennsylvania department of Transportation (PENNDOT) Publication 408, as amended, and shall conform to the requirements of the PENNDOT, Bureau of Design, Standards for Roadway Construction (RC), Publication No. 72.
4. All storm water piping must have watertight joints. All connections between piping and inlets, manholes, headwalls and endwalls must be watertight.
5. If any carbonate geology features, including but not limited to, sinkholes, closed depressions and/or bedrock pinnacles are encountered during construction activities, a Pennsylvania licensed Professional Geologist and/or geotechnical engineer as well as the Township must be notified.
6. All detention basins, rain gardens and vegetated swales shall be clay lined.
7. A licensed professional engineer shall be present at the following critical stages of construction on this site:
   - Inspect the site in conjunction with the Cumberland County Conservation District (CCCD) prior to conversion of Sediment Basin 1 into the permanent detention basin.
   - Inspect the permanent detention basin for stability, size, grade and proper outlet structure after conversion is completed.
8. As–built plans for the stormwater BMPs for each project phase shall be provided within six months following completion of each phase. The as–built plans shall be signed and sealed by a PA registered professional engineer.
9. A Notice of Termination (NOT) will be required to be submitted following approval of the final as–built plans. Prior to accepting the NOT, the Department and/or Conservation District staff will perform a final inspection to ensure site stabilization and verify adequate installation and function of the stormwater BMPs.
10. Sediment cleaned from detention basins and other stormwater BMPs shall be disposed of in approved off–site disposal areas or may be spread in on–site upland meadow areas and stabilized immediately with seed and mulch.
11. All manhole frames and covers are required to meet PennDOT standards.
12. Runoff from all buildings must be directed towards the street (alley) and away from adjacent buildings and properties.
13. All grass areas disturbed within the Phase 8.1 boundary (excluding borrow areas) shall be treated with compost as noted in the Amended Soils Specifications.

SOILS AMENDMENT SPECIFICATIONS:

Add compost to exiting topsoil stockpile to provide a mix of 80% topsoil and 20% compost. Mix thoroughly to incorporate the compost fully into the soil. Spread top soil/compost mix to a depth of 4–6 inches on all areas to be seeded. Seed and mulch top soil mix per plan specifications. Post seeding care only requires daily watering to keep the soil uniformly moist until the new grass seedlings have reached 1 1/2 inches in height, which is typically about three weeks after emergence.

Project Number: 15–100–31

Date: APRIL 12, 2022

ARCONA NEIGHBORHOOD 8.2

Lower Allen Township - Cumberland County, PA

CHARTER Homes & Neighborhoods

POST CONSTRUCTION STORMWATER MANAGEMENT PLAN – COVER

Project Manager: DAVID B. KEGERIZE PE
Drafting: D TURNER
Project Engineer: G. MITCHELL KING PE, PLS
Checked by: –
Project Surveyor: MATTHEW A. WAYMAN PLS

Scale: 1" = 200'

0 100 200 400 600

Seal: COMMONWEALTH OF PENNSYLVANIA REGISTERED PROFESSIONAL G. MITCHELL KING ENGINEER No. PE38883-E 10/13/22

TOWNE SQUARE ENGINEERING
313 W. Liberty St., Suite 241
Lancaster, PA 17603
Phone: (717) 283-4538
Civil Engineers & Land Planners

DATE	REVISIONS
10/4/22	REV. FOR NEW CH&N HOMESITES
8/29/22	REV. PER TWP. AND CH&N COMMENTS
8/11/22	REV. PER BUCKEYE EMAIL DATED AUGUST 5, 2022
7/27/22	REV. PER BUCKEYE AND TWP. COMMENTS
6/20/22	ADDRESSED LATWP ZONING COMMENTS
6/9/22	REV. PER LATWP LETTER DATED MAY 16, 2022
6/2/22	ADDED POTHOLE DATA

Section Number: SM–1

10/13/2022 10:08 AM L:\15–100–31\SHEETS\PRELIMINARY–FINAL\39 SM–01.DWG

PRELIMINARY / FINAL

SEQUENCE OF CONSTRUCTION FOR PROJECT

PRE-CONSTRUCTION STABILZATION OF THE SITE

All disturbed areas from agricultural activities must be stabilized completely in the previous growing season prior to the start of grading by seeding with small grain or permanent vegetative cover as specified on these plans.

The project is anticipated to be constructed in multiple phases. Separate Erosion & Sediment Control sequencing are provided for construction of each phase. Construction shall be conducted in a manner to minimize earth disturbance at any given time.

All earth disturbance activities shall proceed in accordance with the following sequence. Each stage shall be completed and immediately stabilized before any following stage initiated. Clearing, grubbing and topsoil stripping shall be limited only to those areas described in each stage. Upon temporary cessation of the earth disturbance activity for four days or longer, the project site shall immediately be stabilized with the appropriate temporary stabilization. As soon as slopes, channels, ditches and other disturbed areas reach final grade, the area shall immediately be stabilized with the appropriate permanent stabilization.

Each phase stands independent of the other.

Construction of Arcona Phase 8.2 is to be sequenced in the following order:

Phase 8.2

1. As least 7 days before starting any earth disturbance activities, the operator shall invite all contractors involved in those activities, the landowner, all appropriate Municipal Officials, the Erosion and Sedimentation Control Plan Preparer and a representative of the Conservation District to an on-site meeting. The excavation contractor(s) shall execute and NPDES co-permittee/transferee agreement with PA DEP. The contractor shall ensure that all construction shall be done in accordance with the requirements of the NPDES permit.
2. The limit of disturbance must be field staked prior to any earth moving activities.
3. Install rock construction entrance #1 at the intersection of Egreton Road and Parade Street. All construction equipment shall utilize the rock construction entrance for ingress and egress to the site. Maintain entrance over course of construction per detail to prevent tracking of soil/mud onto public roads.
4. Install silt filter sock as shown on the plan along the perimeter of the site. The contractor shall maintain the silt sock in working order throughout the course of construction, making inspections after each rainfall event and making any necessary repairs. In the event that any silt filter sock should fail in the course of construction, super silt fence barrier may be installed as a repair measure.
5. Construct temporary access drive to Sediment Basin #1. All vehicular access to the areas of the sediment basin shall be from the temporary access drive. No other earth disturbance is permitted on the site except that necessary to construct the sediment basin.
6. Inspect Sediment Basin outlet culverts, riprap pads, emergency spillway, super silt fence baffles, skimmers and rock rings by the skimmers to ensure that all E&S controls are installed as functioning as shown on Sheet ES-8. Repair and replace as needed.
7. Excavate the westerly berm of the basin to conform to the proposed basin contours shown on the Phase 8.2 plans. Sediment Basin must be protected from unauthorized acts of third parties.
8. Clear and grub the construction site.
9. Strip topsoil within the construction site. Stockpile in designated area(s) as shown on the plans and place silt filter sock on the down slope side of the stockpile. Immediately stabilize with temporary seeding as specified on the plan.
10. Conduct bulk earth moving operations. All runoff shall be directed to the sediment basin.
11. Install storm sewers from EW-200 to HW-242B; including HW-200, I-201, MH-202, I-202A, I-203, I-203A, MH-204, I-205, MH-206, I-207, I-208, I-209, I-210, I-211, I-212, I-212A, I-213, I-214, I-214A, I-215, MH-216, I-217, I-218, I-219, MH-220, I-220A, I-220B, I-221, I-222, I-223, MH-224, I-225, MH-226, I-227, I-228, I-229, I-230, I-231, I-232, MH-233, I-234, I-235, I-236, I-239, I-240, I-241, I-241A, I-241B, I-242, I-242A and HW-242B. Install rip-rap apron at HW-200. All excavated utility trench must be backfilled by the end of each day.
12. Install storm sewers from EW-243 to I-273; including EW-243, MH-244, I-245, I-246, MH-247, I-248, I-249, MH-250, I-251, I-252, I-253, MH-254, I-255, I-256, I-257, I-258, I-259, MH-260, I-261, I-262, I-263, I-264, I-265, I-68, MH-266, I-267, I-268, I-269, I-269A, I-270, I-271, I-272, I-273 and mh-300.
13. Install storm sewer pipe run from MH-30 to EW-274. Make connection from MH-29 to MH-30.
14. Install storm sewers from EW-275 to I-280; including EW-275, I-276, MH-277, I-278, I-279 and I-280. All excavated utility trench must be backfilled by the end of each day.
15. Install the water main. All excavated utility trench must be backfilled by the end of each day.
16. Install the sanitary sewer. All excavated utility trench must be backfilled by the end of each day.
17. Final grade all streets subgrade and shoulder areas for Barnard Street, Breeches Way, Egreton Road, Parade Street, Herr Street, Trow Street, and Bullfinch Lane.
18. Install curbing along all of Egreton Road, Parade Street, Herr Street, Bullfinch Lane, and Trow Street.
19. Install stone subbase as soon as possible after completing curb. Pave Barnard Street, Breeches Way, Egreton Road, Parade Street, Herr Street, Bullfinch Lane, Trow Street, Pursely Way, Cheshire Way, Miers Place, Hope Way, Chandle Court, Kolbe Way, Pages Way, Montague Way, Speas Way, Carnegie Way, and Arlington Way with base and binder courses.
20. Begin construction of the homes after stone base on streets is in place. See Project Staging for Individual Lots.
21. Replace topsoil, seed and mulch to stabilize all disturbed areas as possible after each lot or block of homes are completed.
22. Pave Barnard Street, Breeches Way, Egreton Road, Parade Street, Herr Street, Bullfinch Lane, Trow Street, Pursely Way, Cheshire Way, Miers Place, Hope Way, Chandle Court, Kolbe Wway, Pages Way, Montague Way, Speas Way, Carnegie Way, and Arlington Way with wearing course when construction of dwellings is completed.
23. Contact the Cumberland County Conservation District for site inspection prior to removal of any sediment basin.
24. Once all lots within the watershed of Sediment Basin #1 have been completely stabilized, and the Conservation District has approved removal of the sediment basin, remove the sediment basin and stabilize immediately with permanent seeding.
25. **Once the Conservation District has approved removal of Sediment Basin #1, convert to the permanent Detention Basin #1. Check the permanent detention basin for stability, size, grade and proper outlet structure after conversion is completed. See Project Staging – Converting Sediment Basin to Detention Basin.**
26. Check site for erosion and repair any damaged areas. All portions of the site shall be stabilized.
27. Remove perimeter compost filter sock, spread compost mulch around any disturbed areas and remove any other sediment controls once all disturbed areas are completely stabilized.
28. A final critical stage inspection performed by the site's engineer to verify all previously installed PCSM BMPs are still functioning as designed and not impacted by construction activities.
29. Upon completion of the project a completed Notice of Termination (N.O.T.) shall be submitted to the department and/or Conservation District Staff so a final inspection can be performed to ensure stabilization and verify adequate installation and function of BMPS.

Project Staging – Individual Lots

Each lot will be staged in the following order:

1. Install stabilized construction entrance.
2. Install silt filter sock as shown on plan.
3. Rough grade lot and stabilize immediately with temporary seeding.
4. Excavate for dwelling foundation. Place excess soil on designated soil stockpile location. Install silt filter sock below the stockpile.
5. Construct dwelling.
6. Connect utilities.
7. Install sidewalk along frontage of lot.
8. Pave driveway.
9. Final grade lot and stabilize immediately with permanent stabilization.
10. Remove silt filter sock once all disturbed areas are stabilized.

Project Staging – Converting Sediment to Detention Basin

Once the Conservation District has approved removal of the Sediment Basin, convert to the Permanent Detention Basin as follows:

1. Stabilize the emergency spillway with geotextile and rip-rap immediately. Stabilize any other disturbed areas immediately with permanent seeding.
2. Remove the temporary riser pipe. Dispose of properly or store for reuse.
3. Remove baffles and cleanout stakes from the basin bottom. Dispose of properly or store for reuse.
4. Remove temporary floating skimmers. Dispose of properly or store for reuse. Remove any grout used to seal skimmers into inlets.
5. Remove any sediment from the basin outlet pipes.
6. Remove stainless steel orifice plate used to attach the floating skimmers to the inlets. Stainless steel orifice plates were used to cover the 24"wide x 12"high rectangular orifices in the basin outlet structures required for the permanent basin configuration.
7. Bring grade up the permanent detention basin elevation and stabilize immediately with permanent seeding and mulch.
8. **Install stone filter ring around the basin outlet structure to protect from sedimentation. Once the basin bottom is completely stabilized, remove stone filter ring and stabilize disturbed area immediately with permanent seeding and mulch.**

Sheet Number: 40 of 64

Project Number: 15-100-31

Date: APRIL 12, 2022

ARCONA NEIGHBORHOOD 8.2

Lower Allen Township - Cumberland County, PA

CHARTER Homes & Neighborhoods

POST CONSTRUCTION STORMWATER MANAGEMENT PLAN

Project Manager: DAVID B. KEGERIZE PE

Drafting: D TURNER

Project Engineer: G. MITCHELL KING PE, PLS

Checked by: –

Project Surveyor: MATTHEW A. WAYMAN PLS

Scale: 1"=50'

0 25 50 100 150

Seal: COMMONWEALTH OF PENNSYLVANIA, REGISTERED PROFESSIONAL G. MITCHELL KING ENGINEER No. PE36883-E 10/13/22

TOWNE SQUARE ENGINEERING
313 W. Liberty St., Suite 241
Lancaster, PA 17603
Phone: (717) 283-4538

Civil Engineers & Land Planners

DATE	REVISIONS
10/4/22	REV. FOR NEW CH&N HOMESITES
8/29/22	REV. PER TWP. AND CH&N COMMENTS
8/11/22	REV. PER BUCKEYE EMAIL DATED AUGUST 5, 2022
7/27/22	REV. PER BUCKEYE AND TWP. COMMENTS
6/20/22	ADDRESSED LATWP ZONING COMMENTS
6/9/22	REV. PER LATWP LETTER DATED MAY 16, 2022
6/2/22	ADDED POTHOLE DATA

Section Number: SM-2

10/13/2022 10:16 AM L:\15-100-31\SHEETS\PRELIMINARY-FINAL\40 SM-02.DWG

PRELIMINARY / FINAL

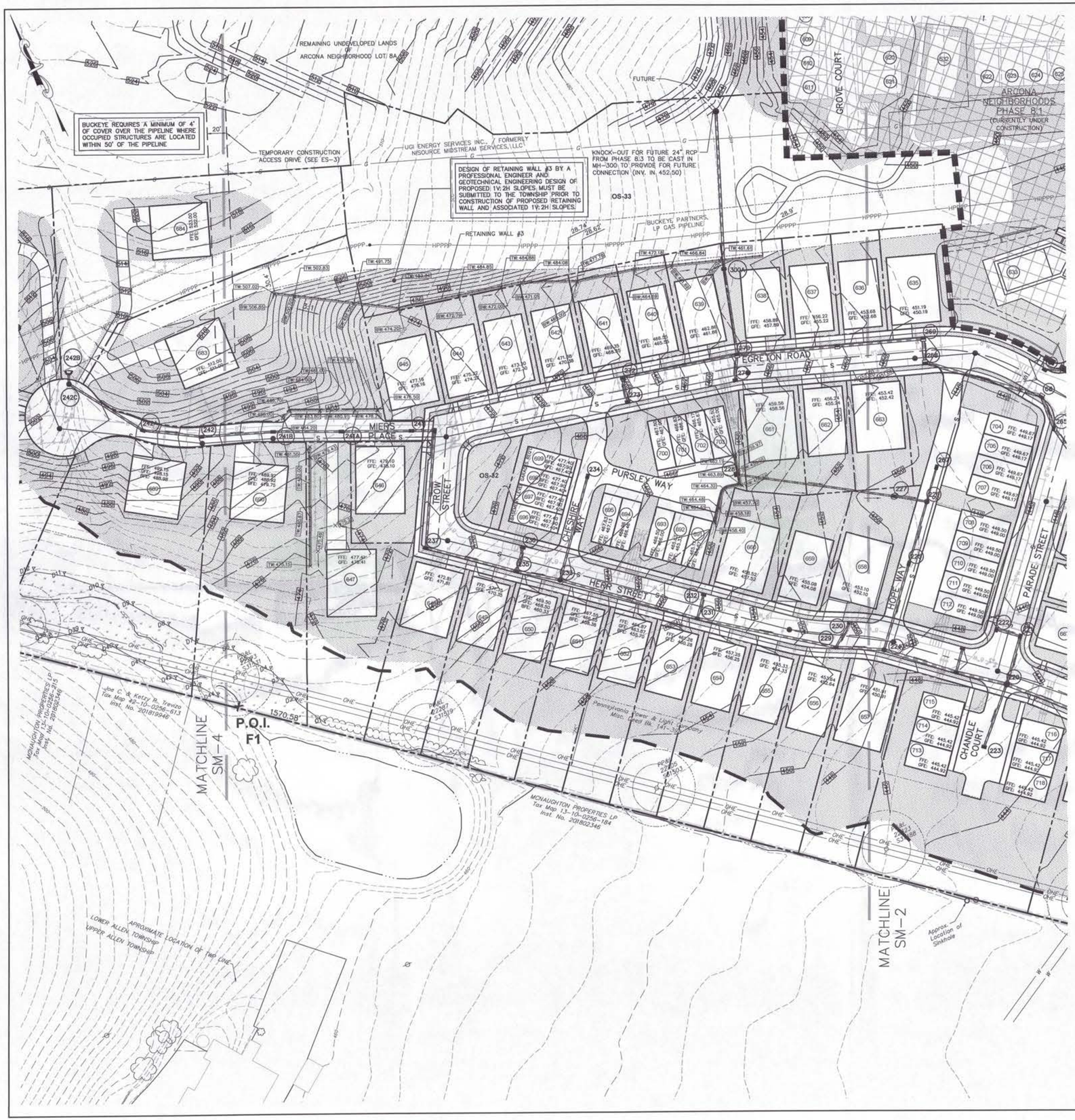

LEGEND

EXISTING		PROPOSED
	PROPERTY LINE	
	RIGHT-OF-WAY LINE	
	EASEMENT LINE	
	ROADWAY CENTERLINE	
	CURB LINE	
	EDGE OF PAVEMENT	
	EDGE OF STONE	
	MIN. BLDG SETBACK LINE	
S	SANITARY SEWER LINE	
	SANITARY FORCE MAIN	
OHT	WATER LINE	W
G	GAS LINE	G
OH	OVERHEAD UTILITIES	
OHE	OVERHEAD ELECTRIC	
UE	UNDERGROUND ELECTRIC	
OHT	OVERHEAD TELEPHONE	
UT	UNDERGROUND TELEPHONE	
X	FENCE	X
560	INDEX CONTOUR	560
558	INTERMEDIATE CONTOUR	558
X 391.25	SPOT ELEVATION	x 392.15
	STORM INLET & PIPING	
	GUIDE RAIL	
	TREELINE	
	RAILROAD	
	EDGE OF WATER (STREAM)	
	SOILS LINE	
	ZONING LINE	
	MUNICIPALITY LINE	
	DECIDUOUS TREE	
	CONIFEROUS TREE	
	PROPERTY CORNER MARKER FOUND	
	CONC. MONUMENT SET	
	PIN	
	ANGLE BREAK, PC/PT	
	EASEMENT CORNER	
	UTILITY POLE	
LP	LIGHT POLE	LP
	LIGHT	
WELL	WELL	WELL
WSO	WATER SHUT-OFF VALVE (SERVICE)	WSO
WV	WATER VALVE (MAIN)	WV
FH	FIRE HYDRANT	FH
GSO	GAS SHUT-OFF VALVE (SERVICE)	GSO
GV	GAS VALVE (MAIN)	GV
SV	SEWER VENT	SV
CO	SEWER CLEAN OUT	CO
	ELECTRIC MANHOLE	
	STORM MANHOLE	
	SANITARY MANHOLE	
	TELEPHONE MANHOLE	
	SIGN	
MB	MAIL BOX	
	DEEP PROBE	
	PERCOLATION TEST HOLE	
P8-4 P8-5	WETLANDS	

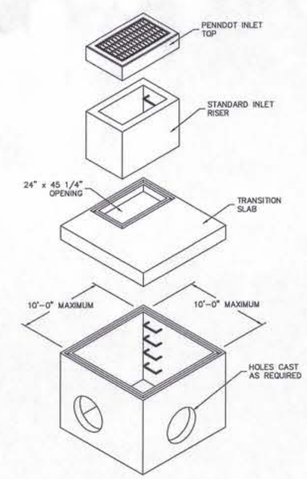

1. All inlets and manholes shall be capable of handling HS-25 loading. They shall be constructed according to PennDOT Publication 408 and shall conform to the requirements of PennDOT, Bureau of Design, Standards for Roadway Construction (RC), Publication No. 72.
2. Type 4, Type 5 and Type 6 boxes shall be constructed as specified in RC-46M, pages 1 through 44 of 44. All construction shall be in accordance with the directions, dimensions, reinforcing and arrangements stated on those sheets.
3. The inlet riser box is optional and may be used if required.
4. A manhole grate and cover may be substituted for an inlet top where noted in the plans and profiles for Arcona, Phase 8.2.

A / SM-3 TYPE 4 THROUGH TYPE 10 CATCH BASIN
NOT TO SCALE

AMENDED SOILS

DATE	REVISIONS
10/4/22	REV. FOR NEW CH&N HOMESITES
8/29/22	REV. PER TWP. AND CH&N COMMENTS
8/1/22	REV. PER BUCKEYE EMAIL DATED AUGUST 5, 2022
7/27/22	REV. PER BUCKEYE AND TWP. COMMENTS
6/20/22	ADDRESSED LATWP ZONING COMMENTS
6/9/22	REV. PER LATWP LETTER DATED MAY 16, 2022
6/2/22	ADDED POTHOLE DATA

Section Number: SM-3

10/13/2022 10:15 AM L:\15-100-31\SHEETS\PRELIMINARY-FINAL\41 SM-03.DWG

Sheet Number: 41 of 64
Project Number: 15-100-31
Date: APRIL 12, 2022

ARCONA NEIGHBORHOOD 8.2

Lower Allen Township - Cumberland County, PA

CHARTER Homes & Neighborhoods

POST CONSTRUCTION STORMWATER MANAGEMENT PLAN

Project Manager: DAVID B. KEGERIZE PE
Project Engineer: G. MITCHELL KING PE, PLS
Project Surveyor: MATTHEW A. WAYMAN PLS
Drafting: D TURNER
Checked by: –
Scale: 1"=50'
0 25 50 100 150

Seal: COMMONWEALTH OF PENNSYLVANIA G. MITCHELL KING PROFESSIONAL ENGINEER 075363 REGISTERED

TOWNE SQUARE ENGINEERING
313 W. Liberty St., Suite 241
Lancaster, PA 17603
Phone: (717) 283-4538
Civil Engineers & Land Planners

PRELIMINARY / FINAL

MATCHLINE SM-5

PENNSYLVANIA TURNPIKE I - 76

Existing Right-of-Way

REMAINING UNDEVELOPED LANDS OF ARCONA NEIGHBORHOOD LOT 8A

BUCKEYE REQUIRES A MINIMUM OF 4' OF COVER OVER THE PIPELINE WHERE OCCUPIED STRUCTURES ARE LOCATED WITHIN 50' OF THE PIPELINE

TEMPORARY CONSTRUCTION ACCESS DRIVE (SEE ES-3)

BUCKEYE PARTNERS, LP GAS PIPELINE

MIERS PLACE

TROW STREET

ALL ROOF RUNOFF AND DRIVEWAY RUNOFF SHALL BE DIRECTED TO MIERS PLACE AND CANNOT FLOW DOWNHILL TO THE WETLANDS

50' TWP. RIPARIAN BUFFER

N62° 43' 43"E 2727.30'

535.20' N68° 36' 34"E

1570.58'

MONALOGTON PROPERTIES LP
Tax Map 13-10-0256-216
Inst. No. 201803346

MONALOGTON PROPERTIES LP
Tax Map 13-10-0256-215
Inst. No. 201803346

Joe C. & Katzy R. Trevino
Tax Map 42-10-0256-613
Inst. No. 201819348

MATCHLINE SM-3

MATCHLINE SM-2

The McNaughton Properties, LP
Tax Parcel 13-10-0256-184
Deed Ref. 280-4820

Strong & Detweiler Partnership, A PA Limited Partnership
Tax Parcel 13-10-0256-017
Deed Book 274, Pg. 1890
Subdivision Plan Recorded in 200801115

McNaughton Properties, LP
Tax Parcel 42-10-0256-109
Instrument No. 201701019
Subd. Plan Bk. 2016-3571, Lot P4, Ph 5

Township of Upper Allen
Tax Parcel 42-10-0256-395
Instrument No. 201421257
Lot 4P-1, Phase 2 Orchard Glen PRD

Township of Upper Allen
Tax Parcel 42-10-0256-395X
Instrument No. 201614069

A / SM-4 TRAIL EXTENSION TO UPPER ALLEN PARK
1" = 100'

AMENDED SOILS

Sheet Number: 42 of 64

Project Number: 15-100-31

Date: APRIL 12, 2022

ARCONA NEIGHBORHOOD 8.2

Lower Allen Township - Cumberland County, PA

CHARTER Homes & Neighborhoods

POST CONSTRUCTION STORMWATER MANAGEMENT PLAN

Project Manager: DAVID B. KEGERIZE PE

Project Engineer: G. MITCHELL KING PE, PLS

Project Surveyor: MATTHEW A. WAYMAN PLS

Drafting: D TURNER

Checked by: -

Scale: 1"=50'

0 25 50 100 150

Seal: COMMONWEALTH OF PENNSYLVANIA REGISTERED PROFESSIONAL G. MITCHELL KING ENGINEER No. PE-073543-E 10/5/22

TOWNE SQUARE ENGINEERING
313 W. Liberty St., Suite 241
Lancaster, PA 17603
Phone: (717) 283-4538
Civil Engineers & Land Planners

DATE	REVISIONS
10/4/22	REV. FOR NEW CHAN HOMESITES
8/29/22	REV. PER TWP. AND CHAN COMMENTS
8/11/22	REV. PER BUCKEYE EMAIL DATED AUGUST 5, 2022
7/27/22	REV. PER BUCKEYE AND TWP. COMMENTS
6/20/22	ADDRESSED LATWP ZONING COMMENTS
6/9/22	REV. PER LATWP LETTER DATED MAY 16, 2022
6/2/22	ADDED POTHOLE DATA

Section Number: SM-4

10/13/2022 10:12 AM L:\15-100-31\SHEETS\PRELIMINARY-FINAL\42 SM-04.DWG

PRELIMINARY / FINAL

Sheet Number: 43 of 64

Project Number: 15-100-31

Date: APRIL 12, 2022

ARCONA NEIGHBORHOOD 8.2

Lower Allen Township - Cumberland County, PA

CHARTER Homes & Neighborhoods

POST CONSTRUCTION STORMWATER MANAGEMENT PLAN

Project Manager: DAVID B. KEGERIZE PE

Project Engineer: G. MITCHELL KING PE, PLS

Project Surveyor: MATTHEW A. WAYMAN PLS

Drafting: D TURNER

Checked by: –

Scale: 1"=50'

0 25 50 100 150

Seal: COMMONWEALTH OF PENNSYLVANIA REGISTERED PROFESSIONAL ENGINEER G. MITCHELL KING

TOWNE SQUARE ENGINEERING

313 W. Liberty St., Suite 241
Lancaster, PA 17603
Phone: (717) 283-4538

Civil Engineers & Land Planners

DATE	REVISIONS
10/4/22	REV. FOR NEW CHAIN HOMESITES
8/29/22	REV. PER TWP. AND CHAIN COMMENTS
8/1/22	REV. PER BUCKEYE EMAIL DATED AUGUST 5, 2022
7/27/22	REV. PER BUCKEYE AND TWP. COMMENTS
6/20/22	ADDRESSED LATWP ZONING COMMENTS
6/9/22	REV. PER LATWP LETTER DATED MAY 16, 2022
6/2/22	ADDED POTHOLE DATA

Section Number: SM-5

10/13/2022 10:10 AM L:\15-100-31\SHEETS\PRELIMINARY-FINAL\A3 SM-05.DWG

PRELIMINARY / FINAL

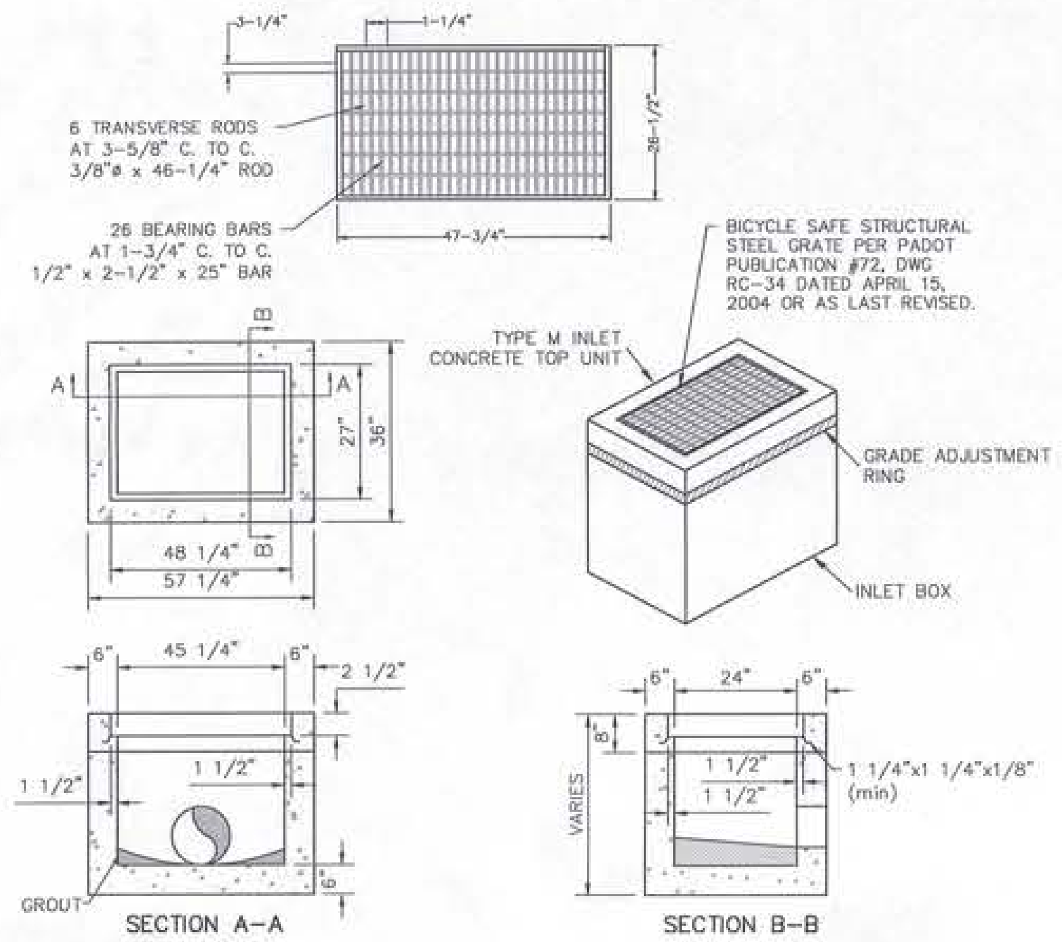

NOTE:
1. CERTIFY THAT STRUCTURAL STEEL BICYCLE SAFE GRATE MEETS OR EXCEEDS HS-25 LOADING REQUIREMENTS.

A / SM-6 — 2'x4' TYPE M INLET WITH BICYCLE SAFE GRATE
NOT TO SCALE

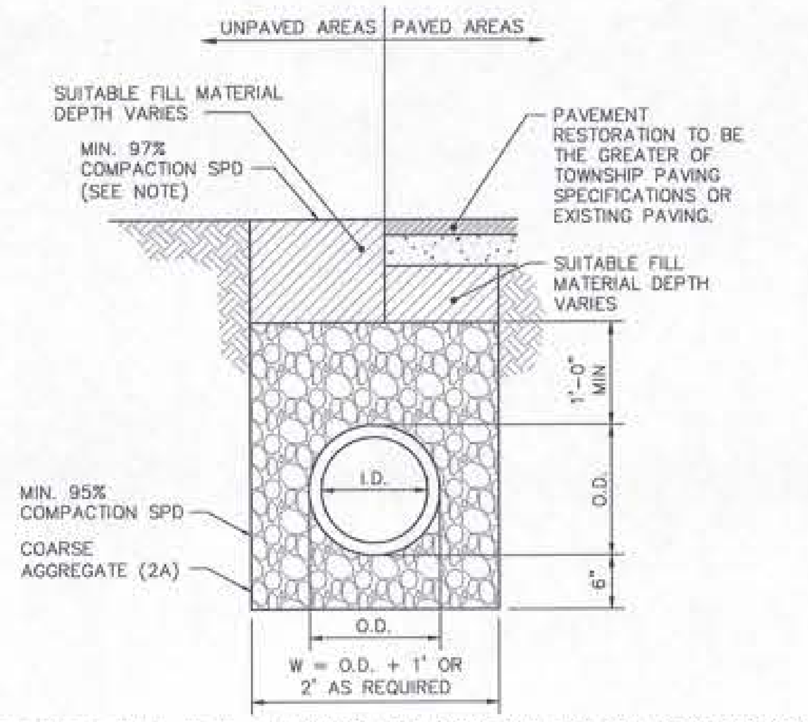

NOTES:
1. CONSTRUCTION SHALL BE IN ACCORDANCE WITH PADOT PUB. #RC-30M STANDARDS FOR SUBSURFACE DRAINS, PIPE PLACEMENT, EXCAVATION – BEDDING – BACKFILL.
2. PLACE 2A COARSE AGGREGATE MATERIAL, IN LIFTS 4" THICK, ADJACENT TO THE LOWER HAUNCHES TO A HEIGHT OF 12" ABOVE THE TOP OF THE PIPE. COMPACT TO 95% SPD. TEST BACKFILL MATERIAL AND CONTINUE EMBANKMENT IN ACCORDANCE WITH PUB. 408, SECTION 601.
3. COMPACT TOP 3'-0" OF SUBGRADE TO 100% IN ACCORDANCE WITH PUB 408, SECTION 206.3.
4. SUITABLE FILL MATERIAL = MATERIAL CONTAINING NO DEBRIS, ORGANIC MATTER, FROZEN MATERIAL OR LARGE STONES WITH A DIAMETER GREATER THAN ONE-HALF THE THICKNESS OF THE COMPACTED LAYERS BEING PLACED.
5. SPD = STANDARD PROCTOR DENSITY.

D / SM-6 — STORM SEWER TRENCH DETAIL - PRIVATE STREETS
NOT TO SCALE

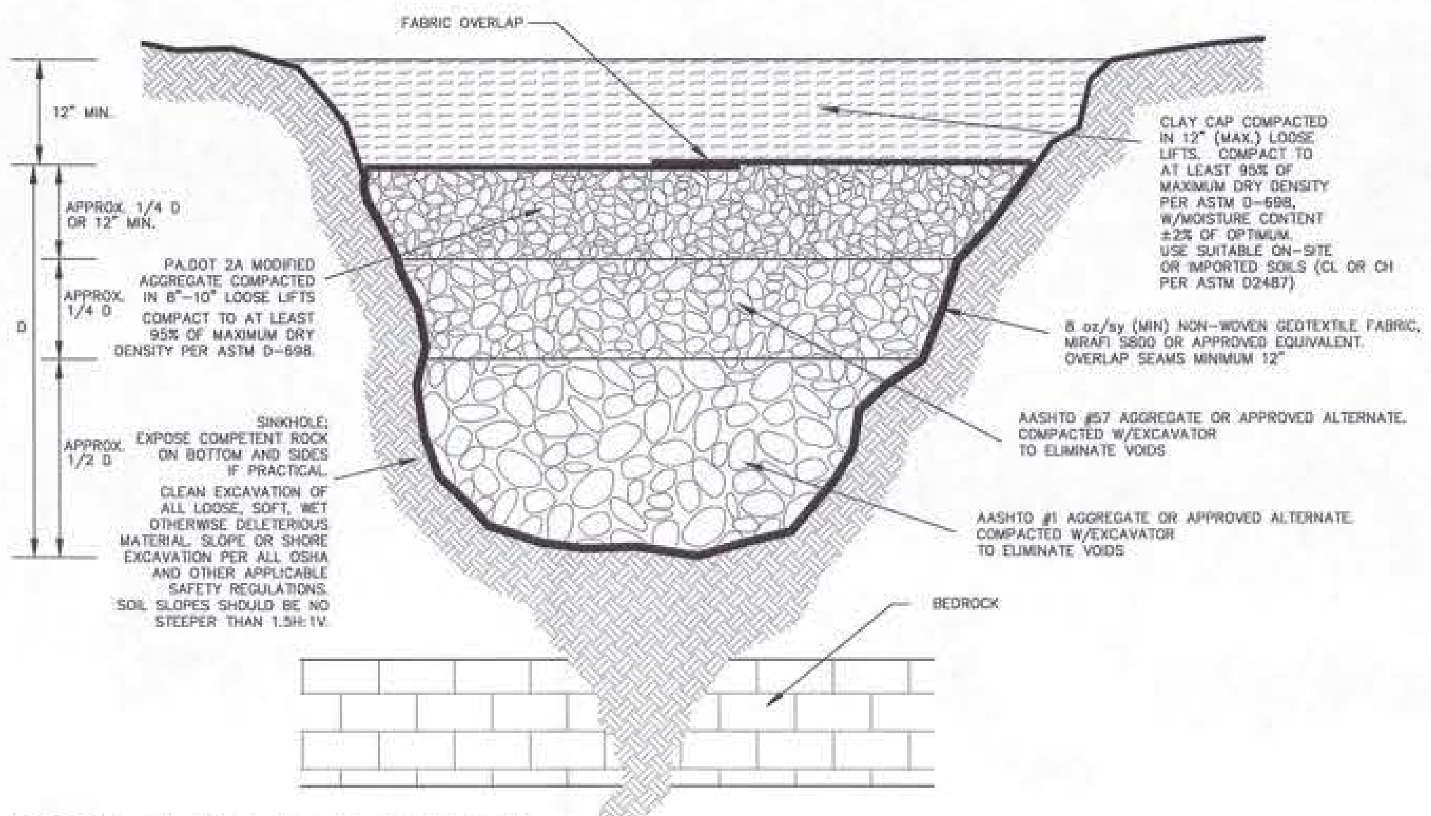

NOTES: Actual repair method should be designed and implemented by contractor based on actual sinkhole size, configuration and location. All sinkhole mitigation measures should be designed and approved by a PA-Licensed professional geologist or geotechnical engineer prior to implementation. DO NOT USE INVERTED FILTER REPAIR IF TOP OF ROCK IS NOT EXPOSED AT THE BASE OF THE REPAIR.

J / SM-6 — SINK HOLE REPAIR DETAIL - NO THROAT ENCOUNTERED
NOT TO SCALE

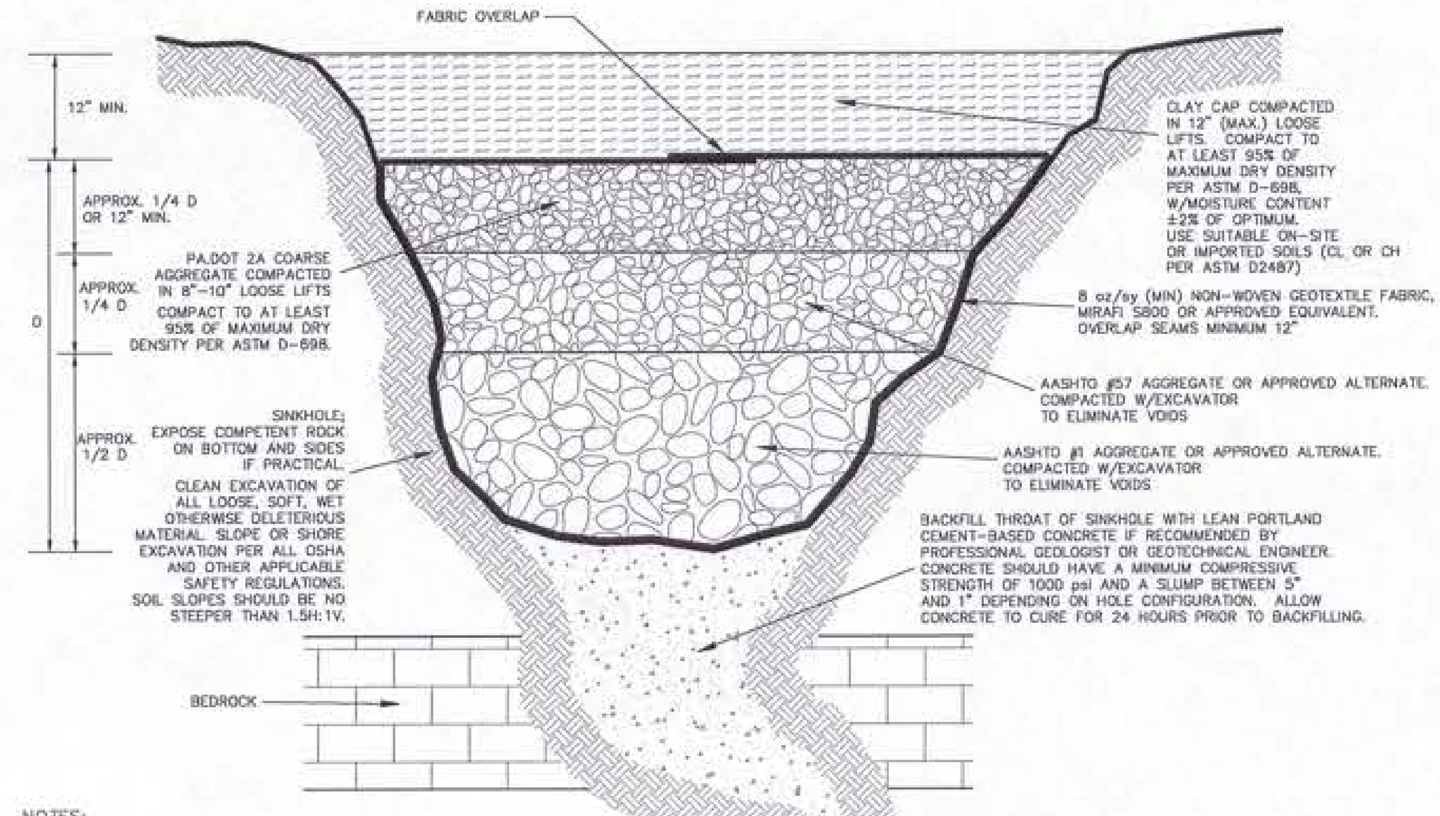

NOTES:

Actual repair method should be designed and implemented by contractor based on actual sinkhole size, configuration and location. All sinkhole mitigation measures should be designed and approved by a PA-Licensed professional geologist or geotechnical engineer prior to implementation. Throat should not be filled with cement if opening should be maintained to continue to convey water movement.

K / SM-6 — SINK HOLE REPAIR DETAIL - THROAT ENCOUNTERED
NOT TO SCALE

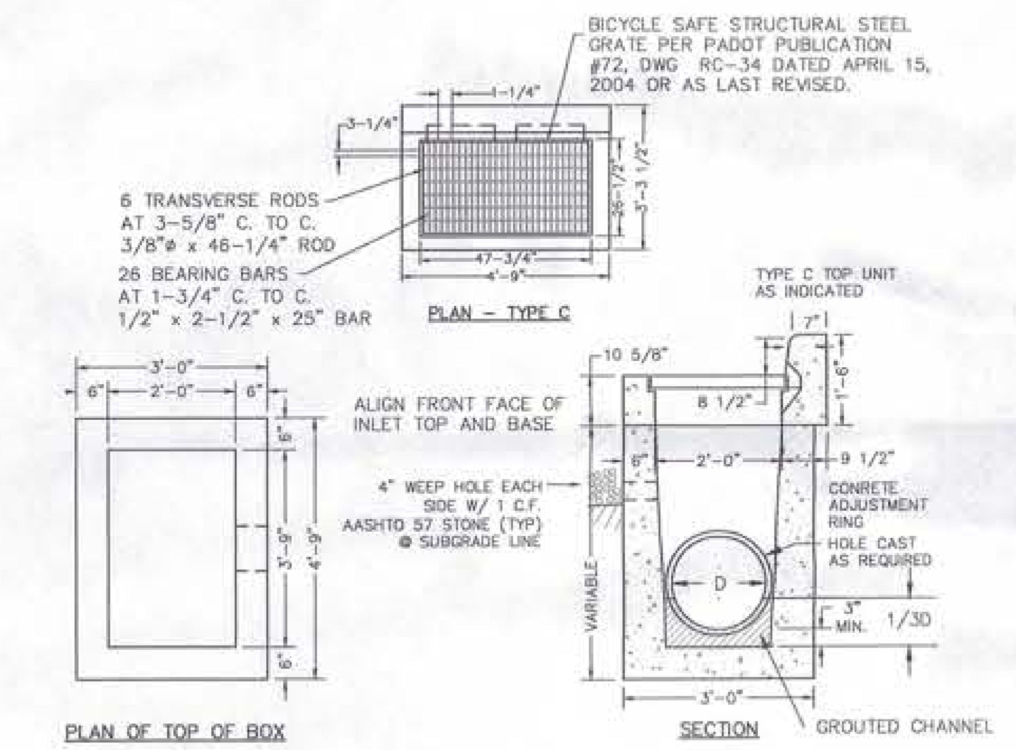

NOTES:
1. PLACE 3/4" PREMOLDED EXPANSION JOINT FILLER MATERIAL AT ABUTTING CURBS.
2. CERTIFY THAT STRUCTURAL STEEL BICYCLE SAFE GRATE MEETS OR EXCEEDS HS-25 LOADING REQUIREMENTS.
3. MINIMUM COVER OF 12" FROM SUBGRADE TO CROWN OF PIPE.
4. INLETS, PRECAST OR POURED IN PLACE, SHALL USE 4000 PSI COMPRESSIVE STRENGTH CONCRETE.
5. POURED IN PLACE CONCRETE INLET BASE SECTION SHALL BE SEPARATE FROM POUR FROM HOOD SECTION INLET POUR.
6. MATERIALS, EQUIPMENT AND METHODS SHALL CONFORM TO LOWER ALLEN TOWNSHIP STREET CONSTRUCTION SPECIFICATIONS AND PENNDOT FORM 408, AS REVISED.
7. MODIFIED TYPE C INLET TOP (15" MINIMUM HEIGHT FOR USE WITH ROLLED CURB.
8. STEPS ARE REQUIRED IN ALL INLETS GREATER THAN 5' DEEP.

B / SM-6 — TYPE C INLET WITH BICYCLE SAFE GRATE
NOT TO SCALE

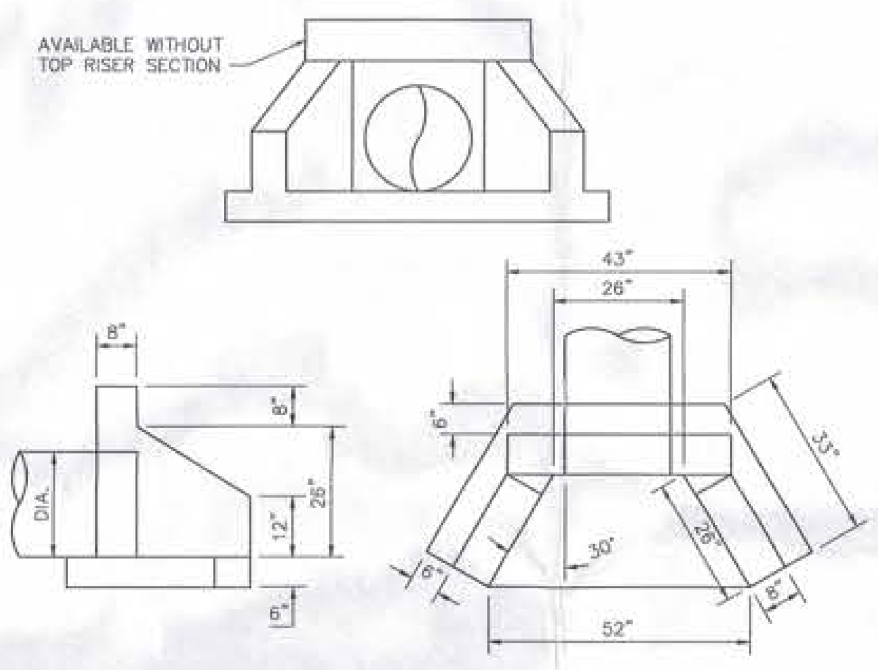

E / SM-6 — END WALL DETAIL <21"
NOT TO SCALE

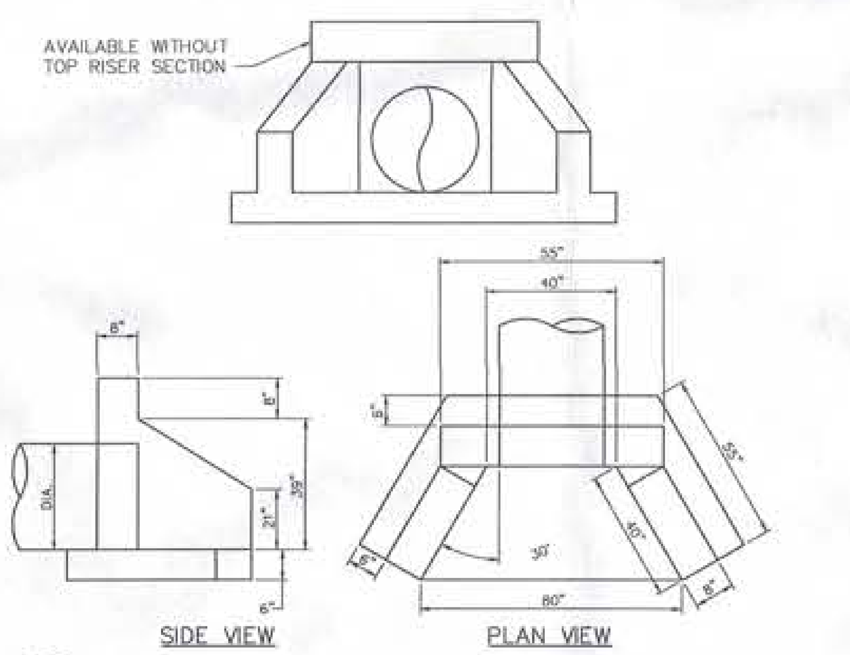

F / SM-6 — D-W ENDWALL DETAIL - MAX. PIPE SIZE 36 IN.
NOT TO SCALE

PIPE (D) DIAMETER	(L)	(W)	(A)	(B)	(C)	(E)	(F)	(G)
48"	6.1'	5.0'	9.0"	8.0"	8.0"	23.0"	9.0"	21.0"
54"	7.5'	8.0'	12.0"	9.0"	12.0"	21.0"	12.0"	24.0"
60"	8.1'	9.2'	12.0"	9.0"	12.0"	21.0"	12.0"	24.0"
72"	9.2'	11.5'	12.0"	9.0	12.0"	21.0"	12.0"	24.0"

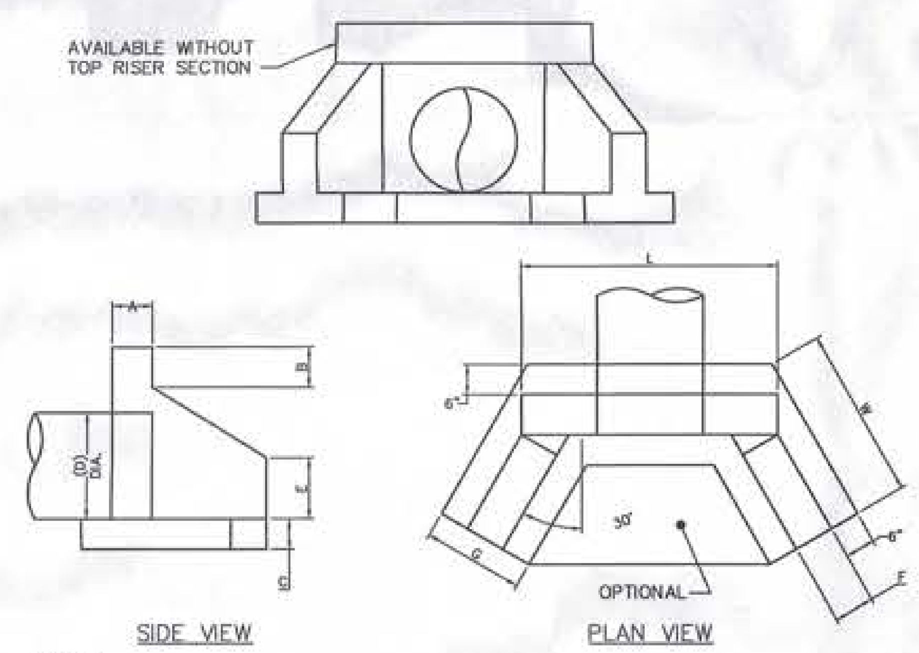

NOTES:
1. PROVIDE MATERIALS AND WORKMANSHIP IN ACCORDANCE WITH THE APPROPRIATE SPECIFICATIONS AS OUTLINED IN PUBLICATION 408, SECTION 605.
2. USE CLASS A CEMENT CONCRETE OR BETTER.
3. CHAMFER EXPOSED EDGES ONE INCH.
4. PROVIDE REINFORCEMENT (0.12in²/ LINEAR FT.) IN ACCORDANCE WITH PUBLICATION 408, SECTION 709. SEE SHEET 2 OF 2
5. ENDWALLS TO BE IN ACCORDANCE WITH PUBLIC. PA DOT RC-31 REQUIREMENTS.
6. FOR SKEWED ENDWALL DIMENSIONS. SEE RC-31 TABLE A.

G / SM-6 — D-W ENDWALL DETAIL - Ø > 48"
NOT TO SCALE

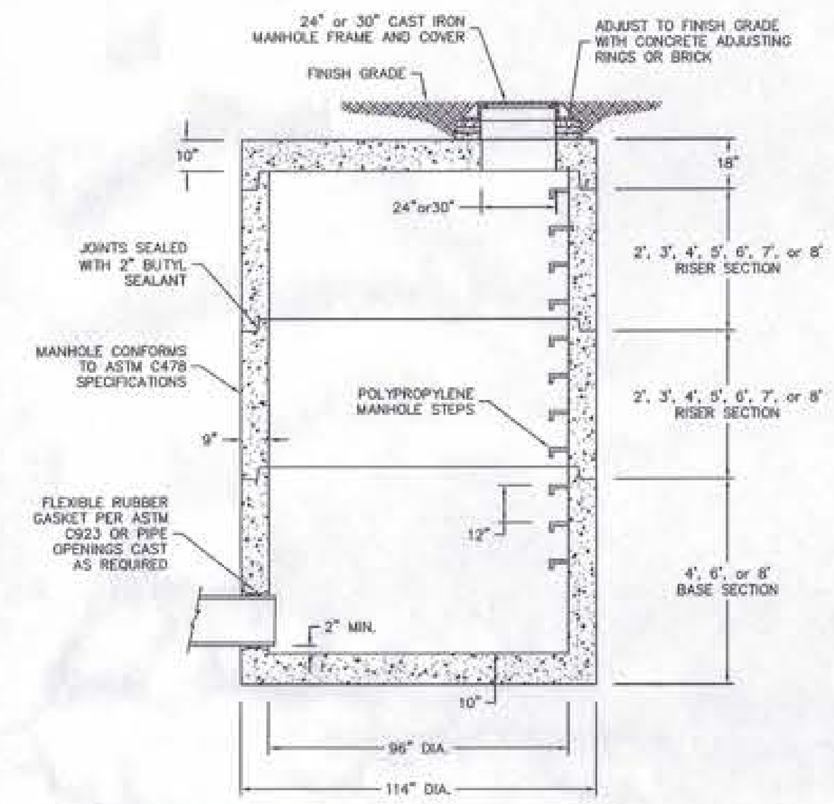

N / SM-6 — MANHOLE DETAIL - 8' DIA.
NOT TO SCALE

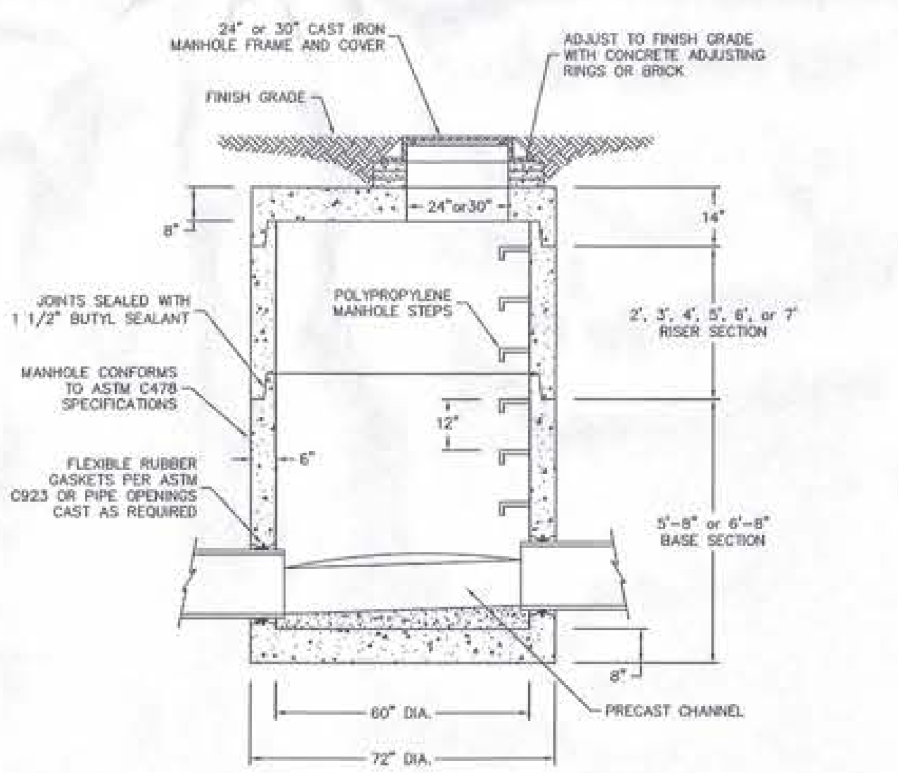

L / SM-6 — MANHOLE DETAIL - 5' DIA.
NOT TO SCALE

NOTES:
1. MEETS ASTM C-478 SPECIFICATIONS
2. AVAILABLE WITH 6" WIDE FLANGED BASE

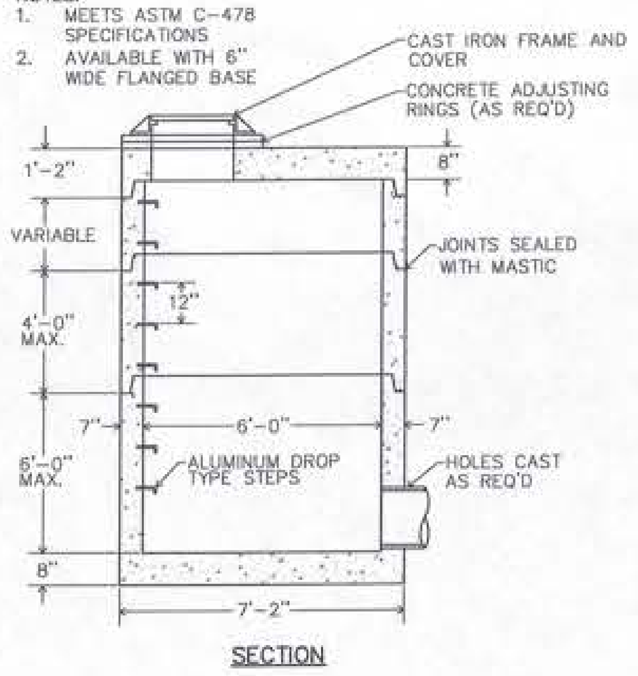

C / SM-6 — MANHOLE DETAIL - 6' DIA.
NOT TO SCALE

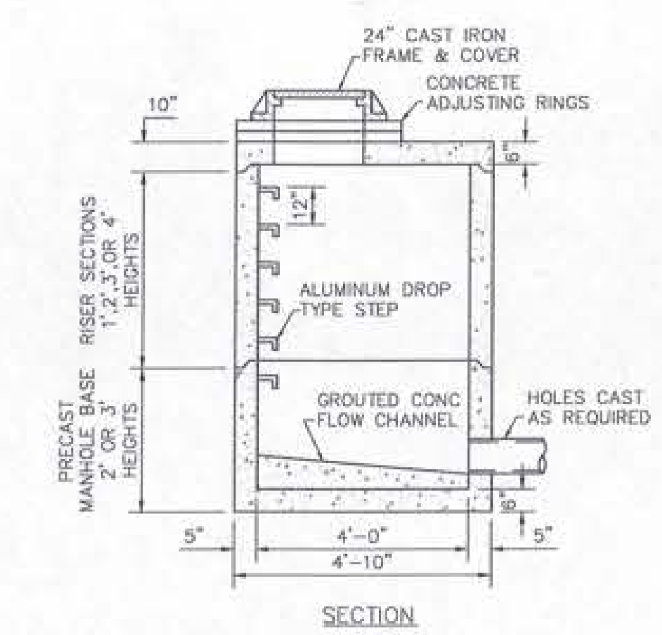

H / SM-6 — MANHOLE DETAIL - 4' DIA.
NOT TO SCALE

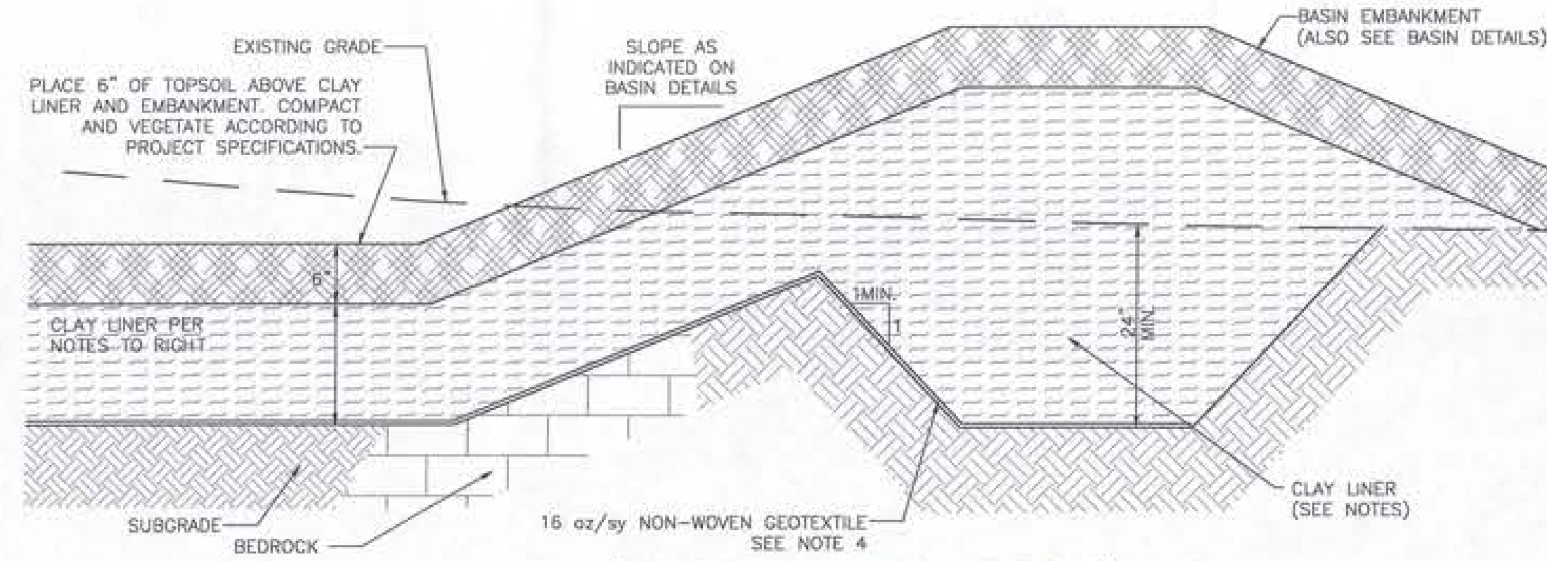

(APPLIES TO ALL SWALES AND BASINS)

M / SM-6 — CLAY LINER DETAIL
NOT TO SCALE

STRUCTURE	Do	RIPRAP SIZE	La	W	d
EW-70	60"x30"	R-4	14'	21.4'	18"
EW-72	60"x30"	R-4	14'	21.4'	18"
EW-200	36"	R-4	13'	14.2'	18"
EW-243	36"	R-4	13'	14.2'	18"
EW-274	48"	R-5	18'	19.2'	27"
EW-275	15"	R-3	6'	6.2'	9"

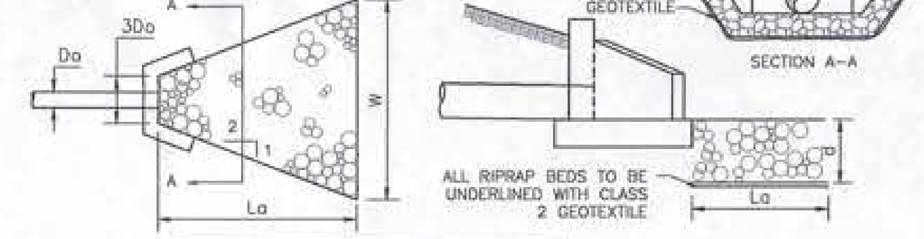

GRADATION OF RIPRAP				
	MAX.	AVG.	MIN.*	DEPTH
R-3	6"	3"	2"	9"
R-4	12"	6"	3"	18"
R-5	18"	9"	5"	27"
R-6	24"	12"	7"	36"

* PIECES SMALLER THAN THE MIN. SIZE SHALL NOT EXCEED 15% OF THE TONNAGE SHIPPED

H / SM-6 — RIP-RAP APRON
NOT TO SCALE

BASIN & SWALE LINER NOTES

1. LOW-PERMEABILITY LINING (E.G., 18 OR MORE INCHES OF COMPACTED CLAY) IS REQUIRED FOR ALL STORMWATER MANAGEMENT BASINS, AND SWALES. A LOW-PERMEABILITY LINER SHOULD BE CONSTRUCTED OF AT LEAST 1 FOOT OF SUITABLE CLAY MATERIALS, CLASSIFYING AS CL OR CL-ML PER THE UNIFIED SOIL CLASSIFICATION SYSTEM (E.G., SUCH AS THE MAJORITY OF THE ON-SITE SUB-SOILS), AND WITH NO UNSUITABLE MATERIALS GREATER THAN 3-INCHES IN ANY DIMENSION, COMPACTED IN 8-INCH MAXIMUM LOOSE LIFTS TO A DRY DENSITY OF AT LEAST 95% OF THE STANDARD PROCTOR MAXIMUM DRY DENSITY (ASTM D-698), AND AT A MOISTURE CONTENT WITHIN -2 TO +4 OF THE OPTIMUM MOISTURE CONTENT DETERMINED FROM THE SAME TEST.
2. THE CLAY LINER IS TO BE PROTECTED FROM DRYING/CRACKING WITH A MINIMUM OF 6" DEPTH OF TOP SOIL COVER. THE TOPSOIL COVER SHALL NOT BE OVER-COMPACTED TO ALLOW PROTECTIVE VEGETATIVE COVER ESTABLISHMENT.
3. THE LINER IS TO BE PLACED IN BASIN BOTTOMS AND EXTENDING UP SIDE SLOPES TO ELEVATION OF EMERGENCY SPILLWAY INVERT. THE COMPACTED CLAY LINER MUST EXTEND AT LEAST 12 INCHES ABOVE THE ELEVATION OF THE EMERGENCY SPILLWAY IN AREAS OTHER THAN THE SPILLWAYS AND MUST EXTEND ACROSS THE SPILLWAYS. THE LINER IN SWALES MUST EXTEND AT LEAST 12 INCHES ABOVE THE MAXIMUM DESIGN WATER ELEVATION. THE LINER SHALL BE PLACED TO PROVIDE A CONTIGUOUS IMPERMEABLE BARRIER AGAINST STORM WATER INFILTRATION OVER THE FOOTPRINT OF THESE FACILITIES.
4. WHERE SHALLOW BEDROCK IS ENCOUNTERED WITHIN 3' OF THE BASIN FINISHED GRADE ELEVATION, OR WHERE INCIPIENT SINKHOLE ACTIVITY IS EVIDENT IN THE STORMWATER MANAGEMENT FACILITY, PROVIDE A LAYER OF 16 OZ/SY NON-WOVEN GEOTEXTILE FABRIC UNDER THE SUPERVISION OF THE ATTENDING QUALIFIED PROFESSIONAL GEOLOGIST OR PROFESSIONAL ENGINEER. OVERLAP SEAMS AND ANCHOR FABRIC ACCORDING TO THE GEOTEXTILE MANUFACTURER'S RECOMMENDATIONS.

CONSTRUCTION OF THE STORMWATER MANAGEMENT FACILITIES SHALL BE OVERSEEN BY THE ATTENDING QUALIFIED PROFESSIONAL GEOLOGIST OR PROFESSIONAL ENGINEER TO ENSURE THESE MINIMUM REQUIREMENTS ARE MET. USE OF GEOTEXTILE REINFORCEMENT SHALL BE AS DIRECTED BY THE ATTENDING PROFESSIONAL GEOLOGIST OR PROFESSIONAL ENGINEER. SINKHOLE MITIGATION MEASURES SHALL BE COMPLETED PRIOR TO LINER PLACEMENT.

Project Number: 15-100-31
Date: APRIL 12, 2022

ARCONA NEIGHBORHOOD 8.2
Lower Allen Township - Cumberland County, PA
CHARTER Homes & Neighborhoods

POST CONSTRUCTION STORMWATER MANAGEMENT DETAILS

Project Manager: DAVID B. KEGERIZE PE
Drafting: D TURNER
Project Engineer: G. MITCHELL KING PE, PLS
Checked by: –
Project Surveyor: MATTHEW A. WAYMAN PLS
Scale: 1"=50'
0 25 50 100 150

Seal: COMMONWEALTH OF PENNSYLVANIA REGISTERED PROFESSIONAL G. MITCHELL KING ENGINEER No. PE[illegible] 10/13/22

TOWNE SQUARE ENGINEERING
313 W. Liberty St., Suite 241
Lancaster, PA 17603
Phone: (717) 283-4538
Civil Engineers & Land Planners

DATE	REVISIONS
10/4/22	REV. FOR NEW CH&N HOMESITES
8/29/22	REV. PER TWP. AND CH&N COMMENTS
8/11/22	REV. PER BUCKEYE EMAIL DATED AUGUST 5, 2022
7/27/22	REV. PER BUCKEYE AND TWP. COMMENTS
6/20/22	ADDRESSED LATWP ZONING COMMENTS
6/9/22	REV. PER LATWP LETTER DATED MAY 16, 2022
6/2/22	ADDED POTHOLE DATA

10/13/2022 10:05 AM L:\15-100-31\SHEETS\PRELIMINARY-FINAL\44 SM-06.DWG

PRELIMINARY / FINAL

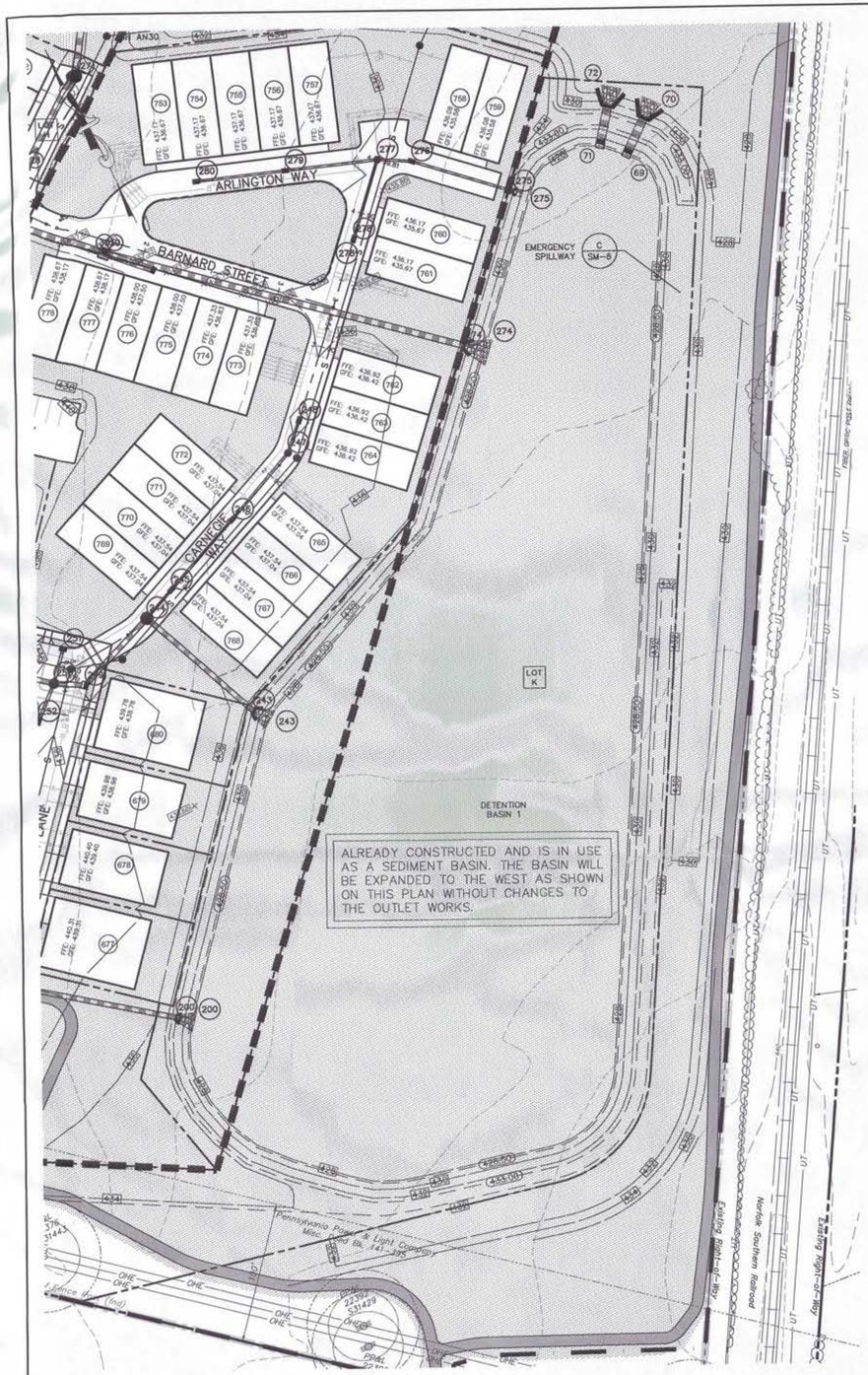

A SM-7 DETENTION BASIN 1 - PLAN
SCALE: 1" = 50'

DETENTION BASIN EMBANKMENT SPECIFICATIONS

COMPACTION:
THE EMBANKMENT FILL & CLAY CORE SHALL BE PLACED IN 6 INCH HORIZONTAL LAYERS CONDITIONED TO OPTIMUM MOISTURE CONTENT, AND COMPACTED TO NOT LESS THAN 95% OF THE MAXIMUM DENSITY PER THE MODIFIED PROCTOR TEST. THE CONTRACTOR SHALL MAINTAIN THE MOISTURE CONTENT OF THE FILL MATERIAL AS REQUIRED TO PROVIDE THIS REQUIRED DENSITY.

MATERIAL:
EARTH SUBSOIL – COHESIVE SOILS WITHOUT LARGE STONES OR ORGANIC MATTER.
CLAY CORE – SANDY CLAY OR SILTY CLAY LOAM
STRIP EXISTING TOPSOIL FROM FOOTPRINT OF EMBANKMENT.

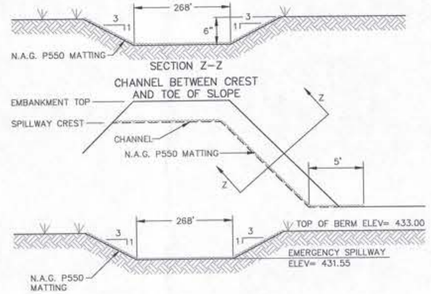

C SM-7 EMERGENCY SPILLWAY
NOT TO SCALE

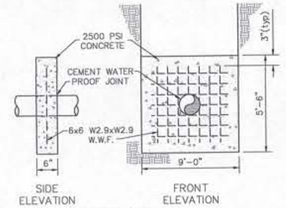

D SM-7 ANTI-SEEP COLLAR
NOT TO SCALE

ALREADY CONSTRUCTED AND IS IN USE AS A SEDIMENT BASIN. THE BASIN WILL BE EXPANDED TO THE WEST AS SHOWN ON THIS PLAN WITHOUT CHANGES TO THE OUTLET WORKS.

WETLAND SEEDING MIX FOR BOTTOM OF BASINS:

Retention Basin Floor Seeding for Wildlife & Plant Diversity Mix
Description: ERNMX-127
Seeding Rate: 15 bulk lbs per acre or 1/3-1/2 lbs per 1,000 ft2

Species List
Agrostis perennans (Autumn Bentgrass)
Agrostis scabra (Ticklegrass (Rough Bentgrass))
Aster puniceus (Symphyotrichum puniceum) (Purple Stemmed Aster)
Bidens cernua (Nodding Bur Marigold)
Carex scoparia (Blunt Broom Sedge)
Carex vulpinoidea (Fox Sedge)
Elymus virginicus (Virginia Wild Rye)
Juncus effusus (Soft Rush)
Juncus tenuis (Path Rush)
Mimulus ringens (Square Stemmed Monkey Flower)
Poa palustris (Fowl Bluegrass)
Scirpus cyperinus (Woolgrass)
Verbena hastata (Blue Vervain)

(800-873-3321 ERNSTSALES@ERNSTSEED.COM)

NOTES:
1. INSTALL WETLAND SEEDING MIX UPON CONVERSION OF SEDIMENT BASIN TO PERMANENT DETENTION BASIN CONDITION (AFTER STABILIZATION OF SITE). COVER SEEDING WITH NAG S75 STRAW MATTING.
2. ONE YEAR AFTER CONVERSION OF TO CONSTRUCTED WETLANDS BOTTOM, CONTACT A WETLANDS SCIENTIST. PROJECT WETLANDS CONSULTANT IS BRAD GOCHNAUER (717-509-3934).
3. THE WETLANDS CONSULTANT WILL SPECIFY ADDITIONAL WETLANDS PLANTINGS REQUIRED TO COMPLETE THE WETLANDS BASED ON THE BASE FLOW AND GROWTH ZONES. ALL WORK SHALL BE DONE IN ACCORDANCE WITH THE PA BMP MANUAL. ALL WETLANDS PLANTINGS TO BE UNDER SUPERVISION OF A WETLANDS SCIENTIST.

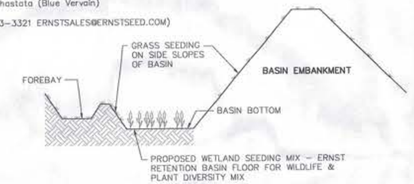

G SM-7 WETLANDS PLANTING
NOT TO SCALE

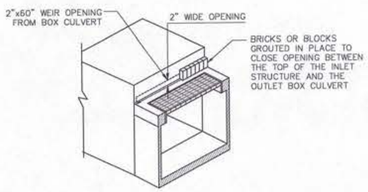

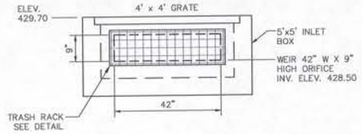

E SM-7 BASIN OUTLET - I-75 & I-77
NOT TO SCALE

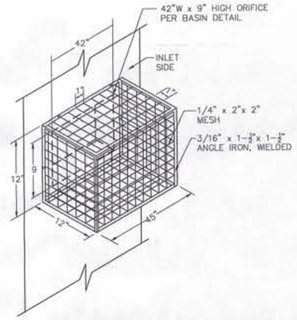

NOTE:
HOT DIPPED GALVANIZED TRASH RACK CENTERED OVER ORIFICE & FASTENED TO INLET BOX WITH (6) SS 1/4" x 2" ANCHOR BOLTS

F SM-7 TRASH RACK - RECTANGULAR ORIFICE
NOT TO SCALE

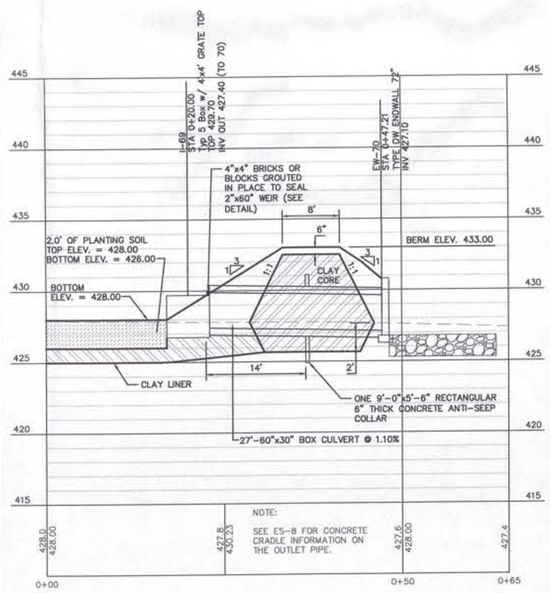

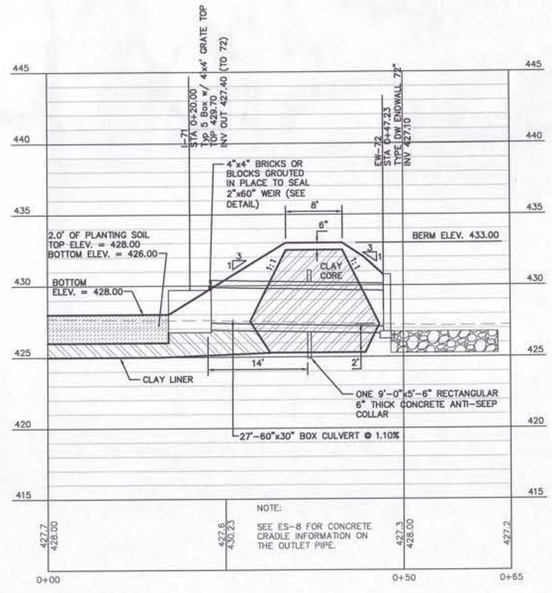

B SM-7 DETENTION BASIN 1 - CROSS SECTIONS
SCALE: HORIZONTAL – 1" = 10' / VERTICAL – 1" = 5'

Sheet Number: 45 of 64
Project Number: 15-100-31
Date: APRIL 12, 2022

ARCONA NEIGHBORHOOD 8.1

Lower Allen Township - Cumberland County, PA

CHARTER Homes & Neighborhoods

POST CONSTRUCTION STORMWATER MANAGEMENT BASIN DETAILS

Drafting: D TURNER
Checked by: –
Scale: 1" = 50'
Project Manager: DAVID B. KEGERIZE PE
Project Engineer: G. MITCHELL KING PE, PLS
Project Surveyor: MATTHEW A. WAYMAN PLS

0 25 50 100 150

Seal: COMMONWEALTH OF PENNSYLVANIA REGISTERED PROFESSIONAL ENGINEER G. MITCHELL KING 10/13/22

TOWNE SQUARE ENGINEERING
313 W. Liberty St., Suite 241
Lancaster, PA 17603
Phone: (717) 283-4538
Civil Engineers & Land Planners

DATE	REVISIONS
10/4/22	REV. FOR NEW CH&N HOMESITES
8/29/22	REV. PER TWP. AND CH&N COMMENTS
8/11/22	REV. PER BUCKEYE EMAIL DATED AUGUST 5, 2022
7/27/22	REV. PER BUCKEYE AND TWP. COMMENTS
6/20/22	ADDRESSED LATWP ZONING COMMENTS
6/9/22	REV. PER LATWP LETTER DATED MAY 16, 2022
6/2/22	ADDED POTHOLE DATA

Section Number: SM-7

10/13/2022 10:18 AM L:\15-100-31\SHEETS\PRELIMINARY-FINAL\45 SM-07.DWG

PRELIMINARY / FINAL